VA Series Driver User Manual Lite

Version V1.8

Preface

The VA series drive is a high-performance, general-purpose flux vector drive that adopts a new modular design concept. It is primarily used for controlling and regulating the speed and torque of three-phase asynchronous motors (or three-phase AC synchronous motors). It is suitable for driving applications in industries such as textile, paper manufacturing, wire drawing, machine tools, packaging, food processing, fans & blowers, pumps, various automated production equipment.

This manual provides detailed information on system configuration, components, dimensions, technical specifications, mechanical, installation, electrical wiring, commissioning & trial operation, troubleshooting, routine maintenance, optional accessories, selection guide, function codes, error codes etc.

Manual Version Update Records:

Date	Version	Revision
2024-09-27	V1.7	1.add communication address for function code 2.correction on some part 3.update of drawings
2025-03-26	V1.8	1.Add product nameplate 2.Delete VA 380 standalone model 3.Add EMPG-03A expansion card introduction 4.update machine with base shape size 5.Add keypad base introduction 6.Add function code P6-24、P6-25、P6-26、P9-79、P9-80、H5-05 7.Revise P8-52 name in general parameter sheet； 8.Change function code P9-17 to P9-44 setting range and default value； 9.Change function code P9-56 name and setting range； 10.U0-24 line speed changes to motor speed；U0-32 trace memory address value changes to AI1 motor temperature, with content 0~200; U0-33: Assign synchronous machine rotor position change to AI2 motor temperature with content 0~200； 11.Add Alarm code：Err46(Line AI2 motor over-temperature)(Synchronous motor). Err47(Line AI3 motor over-temperature)(Synchronous motor)；A64(Back-EMF Learning Value Too Low Fault (Synchronous Motor)； 12.Add fault reading address; 13.Add 9000H parameter address and parameter description

Directory

Chapter 1 Safety Information and Precautions 1

1.1 Safety Information 1

1.2 Precautions 3

Chapter 2 Product Information 5

2.1 Product Positioning and Features 5

2.2 Model Name plate and No. 6

2.3 Product Model Table 7

Chapter 3: Modular Introduction 9

3.1 Overview 9

3.2 Shape and Installation Dimensions 12

3.3 Model with Base Shape Dimension 16

3.4 Keyboard Base Outline Drawing & Installation Hole Dimensions 18

Chapter 4 Technical Data sheet 19

4.1 Electrical Parameter 19

4.2 Technical Specifications 29

4.3 Optional Accessories 31

4.4 Braking Component Selection Guide 33

Chapter 5: Installation and Wiring 36

5.1 Mechanical Installation 36

5.2 Electrical Installation 37

5.3 Drive Main Power Circuit Wiring Method 39

5.4 CM (control module) wring instruction 47

Chapter 6: Operation and Display Examples 53

6.1 Operator Panel Overview 53

6.2 Function Code Viewing and Modification Instructions 54

6.3 Organization of Drive Function Codes 56

6.4 Viewing Status Parameters 57

6.5 Start/Stop Control of the Drive 58

6.6 Usage of Inverter DI Port 65

6.7 Usage of Inverter DO Ports 65

6.8 AI Input Signal Characteristics and Preprocessing 66

6.9. Usage of Inverter AO Ports 66

Chapter 7: Drive Debugging Procedure 68

7.1 Basic debugging procedure 68
7.2 V/F debugging procesure 69
7.3 FVC&SVC debugging procedure 70
Chapter 8 Function parameter sheet 71
8.1 Basic function parameter sheet 71
8.2 Monitor parameter sheet 122
Chapter 9. Parameters Explanation 124
P0 Group Basic function group 124
P1 Group First Motor Parameters 135
P2 Group: Vector Control Parameters 140
P3 Group V/F Control Parameters 149
P4 Group Input Terminals 155
P5 Group Output Terminals 166
P6 Group: Start/Stop Control 172
P7 Group: Keyboard and Display 179
P8 Group - Auxiliary Functions 182
P9 Group Error and Production 193
PA Group: Process Control PID Function 202
Pb Group Swing Frequency, Fixed Length, and Counting 209
PC Group: Multi-segment Instructions and Simple PLC Function 212
PD Group Communication Parameters 217
PE Group User-Defined Function Codes 218
PP Group Function Code Management 220
H0 Group: Torque Control and Limit Parameters 222
H1 Group Virtual IO 224
H2 Group: Second Motor Control 228
H5 Group (control parameter optimization) 232
H6 Group: Analog Input Curve Settings 234
H8 Group: Point-to-Point Communication 237
H9 Group: Sleep/Wake Function Parameters 239
HA Group: Brake Parameters 242
HC Group Analog input /output calibration 244
U0 Group - Basic Monitoring Parameters 246
Chapter 10 EMC (Electromagnetic Compatibility) 248
10.1 Definition 248

10.2 EMC Standards 248
10.3 EMC Guidelines 248
Chapter 11 Maintenance and Troubleshooting 251
11.1 Routine Maintenance of the Drive 251
11.2 Warranty and Fault Handling 252
Appendix 1: Modbus Communication Protocol 258
1.1 Application Mode 258
1.2 Bus Structure 258
Appendix II: Constant Pressure Water Supply Application Macro 268
1 wiring diagram 268
2.2 Additional parameters when the feedback source is AI2: 269
2.3 common parameter, usually no need to change 269
3.3 Parameter Settings: 271

Chapter 1 Safety Information and Precautions

1.1 Safety Information

In this manual, safety precautions are categorized into the following two types:

DANGER: Indicates a hazardous situation which, if not avoided, will result in serious injury or death.

WARNING: Indicates a hazardous situation which, if not avoided, could result in moderate or minor injury, as well as equipment damage.

Users must carefully read this chapter and strictly follow all safety precautions during installation, commissioning, and maintenance of this system. The company shall not be held liable for any injuries or damages resulting from non-compliance with these safety instructions.

1.1.1 Before Installation：

Danger	◆ Do NOT install if you find any damage, rust, or defects in the product or accessories upon unboxing! ◆ Do NOT install if the control system shows water ingress, missing components, or damaged parts! ◆ Do NOT install if there are discrepancies between the packing list and actual items!
Warning	◆ Handle with care during transportation to avoid equipment damage! ◆ Do NOT use drives with physical damage or missing components. Risk of injury! ◆ Avoid touching control system components with bare hands to prevent electrostatic damage!

1.1.2 During Installation：

Danger	◆ Install only on flame-retardant materials (e.g., metal); keep away from combustibles. Fire hazard! ◆ Do NOT loosen fixed bolts, especially those with red markings, without authorization!
Warning	◆ Prevent wire ends or screws from falling into the drive. May cause equipment damage! ◆ Install the drive in a low-vibration location away from direct sunlight. ◆ When installing multiple drives in one cabinet, ensure proper spacing for heat dissipation.

1.1.3 After Installation：

Danger	◆ Installation must be performed by qualified electrical personnel only. Serious hazard potential! ◆ A circuit breaker must be installed between power supply and drive. Fire hazard! ◆ Verify zero-energy state before wiring. Risk of electric shock! ◆ Proper grounding must be implemented per standards. Electric shock hazard! ◆ Use only recommended wire gauges specified in this manual. Accident risk! ◆ Encoder cables must be shielded with proper single-end grounding implementation!

1.1.4 Before Power-on:

 Danger	◆ Verify that the input power voltage matches the drive's rated voltage. Ensure correct wiring of power input terminals (R, S, T) and output terminals (U, V, W). Check for short circuits in peripheral circuits and confirm all connections are secure. Failure to do so may damage the drive! ◆ Do NOT perform high-voltage withstand tests on any part of the drive. The product has already undergone this test before leaving the factory. Improper testing may cause accidents!
 Warning	◆ Ensure the drive cover is properly closed before power-on. Risk of electric shock! ◆ All peripheral wiring must comply with this manual's instructions. Follow the provided circuit connection methods precisely. Improper wiring may cause accidents!

1.1.5 After Power-on:

 Danger	◆ Do NOT open the drive cover while powered. Risk of electric shock! ◆ Do NOT touch any input/output terminals. Risk of electric shock!
 Warning	◆ If motor parameter identification is required, be aware of rotating motor hazards. Improper handling may cause accidents! ◆ Do NOT modify factory-set drive parameters without authorization. Unauthorized changes may damage equipment!

1.1.6 During Operation:

 Danger	◆ Only qualified technicians should perform signal testing during operation. Risk of personal injury or equipment damage! ◆ Do NOT touch cooling fans or discharge resistors to check temperature. Risk of burns!
 Warning	◆ Avoid foreign objects falling into the drive during operation. May cause equipment damage! ◆ Do NOT use contactors to start/stop the drive. May cause equipment damage!

1.1.7 During Maintenance:

 Danger	◆ Do NOT perform maintenance while the drive is powered. Risk of electric shock! ◆ Ensure the drive voltage is below DC 36V before servicing. Residual capacitor charge may cause injury! ◆ Only trained professionals should perform drive maintenance. Risk of injury or equipment damage! ◆ After replacing the drive, reconfigure all parameters. All plug-in modules must be inserted/removed only when power is off!

1.2 Precautions

1.2.1 Motor Insulation Check

Before initial use, after prolonged storage, or during periodic maintenance, perform an insulation check on the motor to prevent drive damage due to insulation failure.

- Disconnect motor cables from the drive before testing.
- Use a 500V megohmmeter; ensure insulation resistance ≥ 200MΩ.

1.2.2 Motor Thermal Protection

If the motor and drive power ratings do not match (especially if the drive's power > motor's power):

- Adjust motor protection parameters in the drive, or
- Install a thermal relay for motor protection.

1.2.3 Operation Above Rated Frequency

The drive supports 0Hz–599Hz output. For operation >50Hz, ensure mechanical systems can withstand higher speeds.

1.2.4 Mechanical Vibration Avoidance

At certain frequencies, mechanical resonance may occur. Use the drive's frequency jump function to avoid resonant points.

1.2.5 Motor Heating & Noise

Due to PWM output harmonics, motors may exhibit:

- Slightly higher temperature rise
- Increased noise/vibration vs. line-frequency operation.

1.2.6 Prohibited Output-Side Components

Do not install on the drive output:

- Power factor correction capacitors
- Varistors (for surge protection)

These may cause instant overcurrent and drive damage.

1.2.7 Contactor Usage Rules

Input side: Do not use contactors for frequent start/stop. If unavoidable, limit to once per hour to prevent capacitor degradation.

Output side: Ensure drive output is OFF before switching contactors to avoid module damage.

1.2.8 Operating Beyond Rated Voltage

Do not use outside the specified voltage range. For atypical voltages:

- Add a step-up/step-down transformer before the drive.

1.2.9 Three-Phase Input Only

Never convert a 3-phase drive to 2-phase input—this may trigger faults or damage the drive.

1.2.10 Lightning Protection

The drive has built-in surge protection against induced lightning. In lightning-prone areas, install additional external surge suppressors.

1.2.11 High-Altitude Derating

At >1,000m elevation, reduced air density impairs cooling. Derate the drive and consult our engineers.

1.2.12 Special Applications

For non-standard wiring (e.g., common DC bus), contact our technical team for guidance.

1.2.13 Drive Disposal

- Electrolytic capacitors (main circuit/PCB) may explode if incinerated.
- Plastic parts release toxic fumes when burned. Dispose as industrial waste.

1.2.14 Motor Compatibility

- Standard motors: 4-pole squirrel-cage induction motors.
- Non-standard motors: Select drives based on motor-rated current.
- Non-inverter-duty motors: Cooling efficiency drops at low speeds. Add forced ventilation or use inverter-duty motors.
- Motor parameter tuning: Perform motor auto-tuning or manually adjust default parameters to match actual motor specs for optimal performance and protection.

Chapter 2 Product Information

2.1 Product Positioning and Features

The VA Series Drive is a universal high-performance flux vector drive designed primarily for speed and torque control of three-phase AC asynchronous motors and permanent magnet synchronous motors. Utilizing advanced vector control technology, it delivers high torque output at low speeds with excellent dynamic performance and superior overload capacity.

The drive features user-programmable functions, PC software monitoring, and communication bus capabilities. It supports multiple encoder types and offers a rich combination of powerful functions with stable performance. Ideal for applications in textiles, papermaking, wire drawing, machine tools, packaging, food processing, fans, pumps, and various automated production equipment.

Features

The VA Series Drive adopts a European modular design concept. Its unique structural design ensures simplicity in every aspect of operation!

1. Easy Installation

- Keyhole mounting design
- DIN rail installation
- Spring-clamp control terminals (no screwdriver required)

2. Convenient Application

- Interchangeable control units
- Flexible add-ons: multi-function terminal box, PG card, bus communication module
- Simplified commissioning with software application macros
- Parameter copy function

3. Simplified Maintenance & Service

- Modular replacement of faulty components (OP panel, CM control unit, PM power unit, PG extension unit, fan, etc.)
- If the PM (power unit) fails, the CM (control unit) remains unaffected—no parameter reconfiguration or rewiring needed
- Significantly reduces service costs and labor time

2.2 Model Name plate and No.

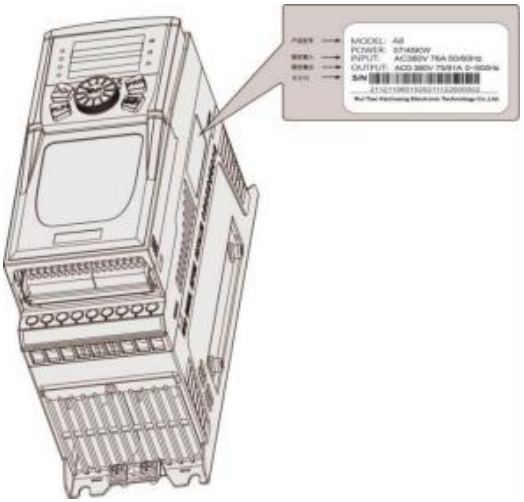

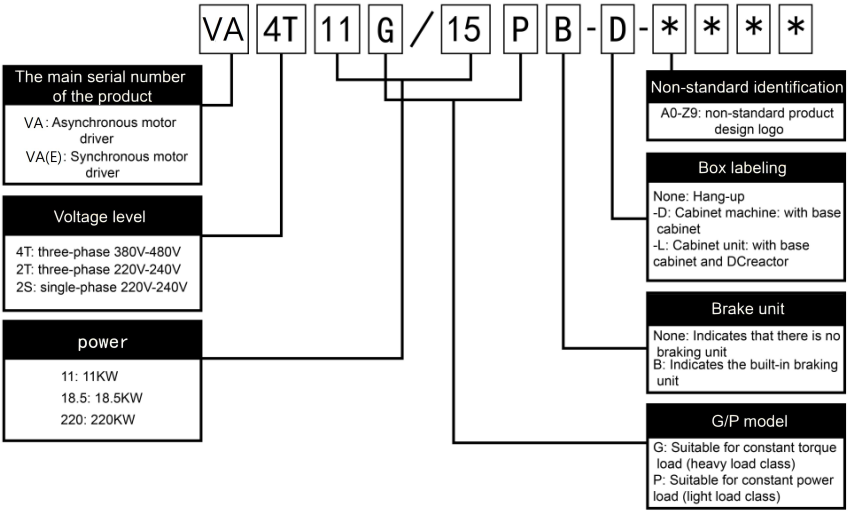

Picture 2-1 Nameplate and rule



Picture 2-2 Product Appearance

2.3 Product Model Table

Model No. and its dimension shown as below table

Table 2-1 Product model No. And dimension reference table

Dimension	Model No. For 3 phase 380v	Model No. For 3 phase 220v	Model No. For 1 phase 220v
A1	VA-4TR75GB/1R5PB VA-4T1R5GB/2R2PB VA-4T2R2GB/004PB	VA-2T0R4GB VA-2TR75GB VA-2T1R5GB VA-2T2R2GB	VA-2S0R4GB VA-2SR75GB VA-2S1R5GB VA-2S2R2GB
A2	VA-4T004GB/5R5PB VA-4T5R5GB/7R5PB	VA-2T004GB	VA-2S004GB
A3	VA-4T7R5GB/11PB VA-4T011GB/15PB	VA-2T5R5GB VA-2T7R5GB	
A4	VA-4T015GB/18R5PB VA-4T018R5GB/22PB	VA-2T011GB	
A5	VA-4T022GB/30PB	VA-2T015GB	
A6	VA-4T030G/037P VA-4T037G/045P	VA-2T18R5GB	
A7	VA-4T045G/055P VA-4T055G/075P	VA-2T022GB VA-2T030G VA-2T037G	
A8	VA-4T075G/090P VA-4T090G/110P	VA-2T045G	
A9	VA-4T110G/132P	VA-2T055G	
A10	VA-4T132G/160P VA-4T160G/185P	VA-2T075G	
A11	VA-4T185G/200P VA-4T200G/220P VA-4T220G/250P	VA-2T090G VA-2T110G	

A12	VA-4T250G/280P	VA-2T132G	
A13	VA-4T280G/315P VA-4T315G/350P	VA-2T160G	
A14	VA-4T350G/400P		
A15	VA-4T400G/450P VA-4T450G/500P	VA-2T200G VA-2T220G	
A16	VA-4T500G/560P VA-4T560G/630P VA-4T630G/710P		
A17	VA-4T710G VA-4T800G		

Chapter 3: Modular Introduction

3.1 Overview

VAseries drive inverter driver is composed of a variety of different functional modules, with the main modules as follows:

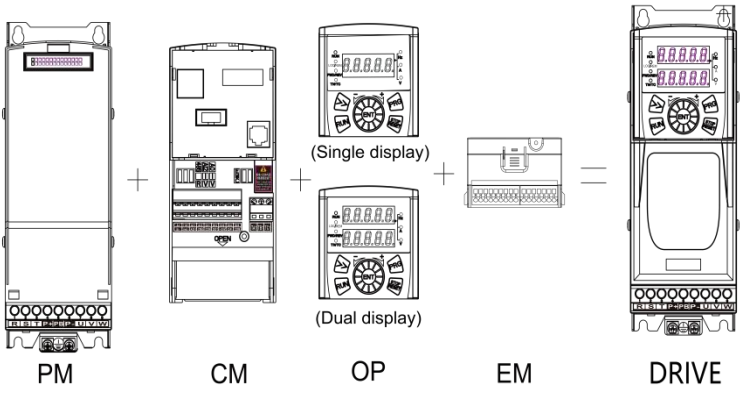

Picture 3-1 Product modular structure

PM Power Module

The PM Power Module supports a power range of 0.75 kW to 800 kW. It incorporates high-reliability Insulated Gate Bipolar Transistors (IGBTs) and isolated drive technology. An advanced thermal management design ensures reliable operation at ambient temperatures up to 50°C.

CM Control Module

The CM Control Module provides versatile motor control and protection, supporting synchronous or asynchronous V/F control, open-loop vector control, and closed-loop vector control modes. It features standard multi-channel analog outputs (AO), digital inputs/outputs (IO), and RS485 communication, with reserved expansion interfaces for seamless integration into diverse applications.

Bar code Introduction



Function version Illustration				
Serial No.	Module Name	Part No.	Version No.	Remark
1	CM Module	CM-01	V001	General-Purpose Asynchronous Motor Models, 7.5 kW and Below (Including Standalone Units)

2		CM-02	V002	General-Purpose Asynchronous Motor Models, 7.5 kW and Above (Including 7.5G/11P)
3		CM-03	V003	General-Purpose Asynchronous Motor Models, 7.5 kW and Below (Including Standalone Units)
4		CM-04	V004	General-Purpose Asynchronous Motor Models, 7.5 kW and Above (Including 7.5G/11P)

OP Operation Display Module (Optional)

The OP Module facilitates driver commissioning, runtime monitoring, and parameter configuration. It includes a standard single-row LED panel, with optional extension support (requires OPT1 or OPT2 mounting tray for external panels). Additional options include a dual-row LED panel or an LCD panel for enhanced user interaction.

Bar code Introduction



Function version Illustration				
Serial No.	Module Name	Part No.	Version No.	Remark
1	OP Module	OP-01	V201	LED Single-Display Panel
2		OP-02	V202	LED Dual-Display Panel
3		OP-03	V203	LCD Copy Panel

EM Expansion Module (Optional)

The EM Module connects to the CM Control Module's expansion port, enabling additional functionality such as extended IO, encoder (PG) interfaces, and communication upgrades to meet specific application requirements.

Bar code Introduction



Function version Illustration				
Serial No.	Module Name	Part No.	Version No.	Remark
1	EM Module	EMIO-A	V101	1line analog output, 1 line relay output
2		EMIO-B	V102	1 line high speed pulse output, 1 line replay output
3		EMIO-C	V103	1 line high speed pulse output, 1 line replay output
4		EMIO-D	V104	2 lines relay output

5		EMIO-E	V105	1 line analog input (supports PT100 temperature acquisition, - 10~+10V input), 1 line analog output, 1 line relay output
6		EMIO-F	V106	1 line high speed pulse output
7		EMIO-G	V107	Isolated 485 Communication, PT100 temperature acquisition, 1 line analog output
8		EMIO-H	V108	Isolated 485 Communication, PT100 temperature acquisition, 1 line replay output
9		EM485-01	V109	Isolated 485 Communication讯
10		EMCAN-01	V110	CAN Bus Expansion (CANLINK, Master-Slave Control)
11		EMPN-01	V111	PROFINET Bus expansion
12		EMECAT-01	V112	EtherCAT Bus expansion
13		EMPG-01	V113	Supports open-collector input & push-pull encoder input
14		EMPG-02	V114	Supports differential input, open-collector input, and push-pull input encoders
15		EMPG-03	V115	Supports resolver encoder, with temperature acquisition and protection for PT100, PT1000, KTY84, and PTC130
16		EMPG-04	V116	Supports differential input, open-collector input, push-pull input encoders, and PT100 temperature acquisition

3.2 Shape and Installation Dimensions

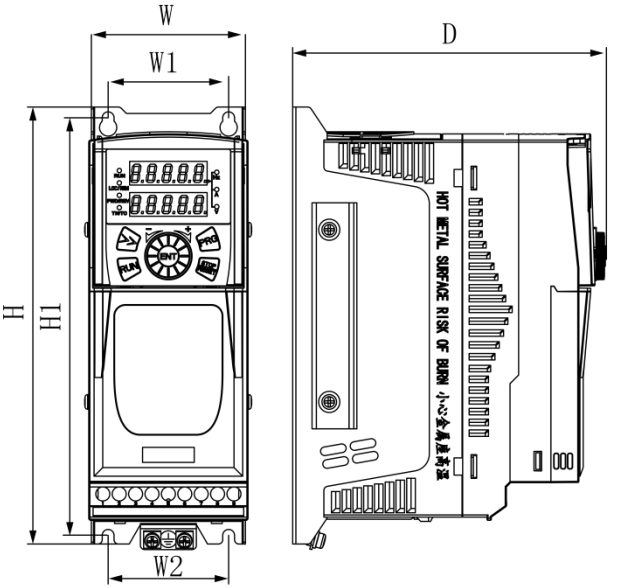

A1~A2 **Unit:mm**

Type	Model No.	Installation Dimension			Shape Dimension			Installation Aperture
		W1	W2	H1	W	H	D	Φ
A1	VA-4TR75GB/1R5PB	56	56	194	78	206	154	5.0
	VA-4T1R5GB/2R2PB							
	VA-4T2R2GB/004PB							
	VA-2T0R4GB							
	VA-2TR75GB							
	VA-2T1R5GB							
	VA-2T2R2GB							
	VA-2S0R4GB							
	VA-2SR75GB							
	VA-2S1R5GB							
	VA-2S2R2GB							
A2	VA-4T004GB/5R5PB	68	68	219	93	235	154	5.0
	VA-4T5R5GB/7R5PB							
	VA-2T004GB							
	VA-2S004GB							

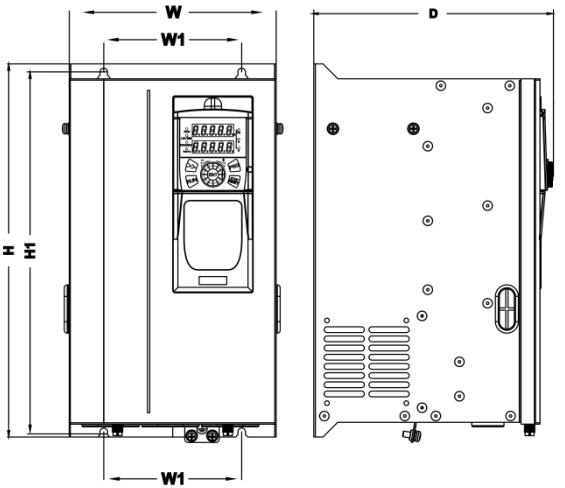

A3~A13 **Unit**:mm

Type	Model No.	Installation Dimension			Shape Dimension			Installation Aperture
		W1	W2	H1	W	H	D	Φ
A3	VA-4T7R5GB/11PB	100	100	265	142	283	195	6.5
	VA-4T011GB/15PB							
	VA-2T5R5GB							
	VA-2T7R5GB							
A4	VA-4T015GB/18R5PB	120	120	289	150	305	210	6.5
	VA-4T018R5GB/22PB							
	VA-2T011GB							
A5	VA-2T022GB/30PB	120	120	314	180	330	217	6.5
	VA-2T015GB							
A6	VA-4T030G/037P	160	160	407	240	418	248	6.5
	VA-4T037G/045P							
	VA-2T018R5GB							
A7	VA-4T045G/055P	220	220	484	307	500	255	10
	VA-4T055G/075P							
	VA-2T022GB							
	VA-2T030G							
	VA-2T037G							

Type	Model No.	Installation Dimension			Shape Dimension			Installation Aperture
		W1	W2	H1	W	H	D	Φ
A8	VA-4T075G/090P	220	220	612	307	650	270	10
	VA-4T090G/110P							
	VA-2T045G							
A9	VA-4T110G/132P	220	220	639	317	680	320	10
	VA-2T055G							
A10	VA-4T132G/160P	300	300	681	425	720	326	12
	VA-4T160G/185P							
	VA-2T075G							
A11	VA-4T185G/200P	200	130	885	335	946	537	12
	VA-4T200G/220P							
	VA-4T220G/250P							
	VA-2T90G							
	VA-2T110G							
A12	VA-4T250G/280P	200	130	925	340	986	585	13
	VA-2T132G							
A13	VA-4T280G/315P	200	130	1085	340	1140	585	13
	VA-4T315G/350P							
	VA-2T160G							

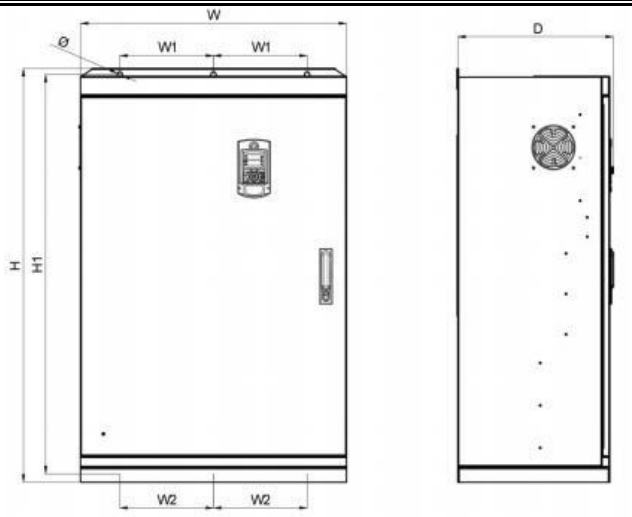

A14~A17

Unit:mm

Type	Model No.	Installation Dimension			Shape Dimension			Installation Aperture
		W1	W2	H1	W	H	D	Φ
A14	VA-4T350G/400P	246.5	246.5	1025	700	1058	412	13
A15	VA-4T400G/450P	300	300	1235	800	1264	483	16
	VA-4T450G/500P							
	VA-2T200G							
	VA-2T220G							
A16	VA-4T500G/560P	350	350	1365	900	1400	510	16
	VA-4T560G/630P							
	VA-4T630G/710P							
A17	VA-4T710G				1200	1800	500	
	VA-4T800G							

3.3 Model with Base Shape Dimension

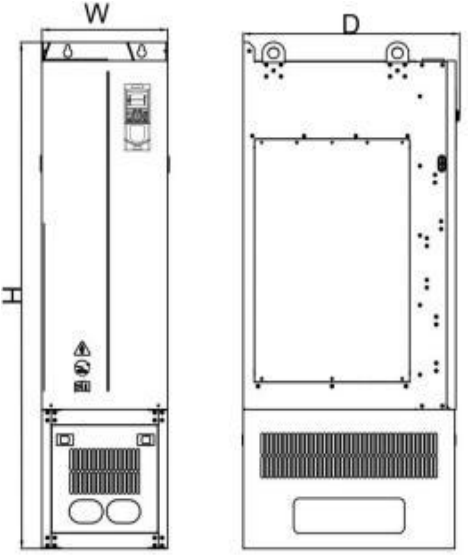

A9-A17 **Unit: mm**

Type	Model No.	Installation Dimension			Shape Dimension
		W	H	D	Φ
A9	VA-4T110G/132P	317	1000	320	10
A10	VA-4T132G/160P	425	1065	326	12
	VA-4T160G/185P				
A11	VA-4T185G/200P	335	1270	537	12
	VA-4T200G/220P				
	VA-4T220G/250P				
A12	VA-4T250G/280P	340	1310	585	12
A13	VA-4T280G/315P	340	1470	585	12
	VA-4T315G/350P				
A14	VA-4T350G/400P	700	1380	412	13
A15	VA-4T400G/450P	800	1636	483	16
	VA-4T450G/500P				
A16	VA-4T500G/560P	900	1756	510	16
	VA-4T560G/630P				
	VA-4T630G/710P				
A17	VA-4T710G/800P	1200	1800	510	M12吊环
	VA-4T800G				

Sign	Description
None	Wall-mounted style
-D	Cabinet type: with base, for 110KW-315KW
-L	Cabinet type: with base and DC reactor, for 355KW-630KW

Specification:

For 380V three-phase models:

≤160kW: DC reactor not supported.

185kW–315kW: Built-in DC reactor standard.

Wall-mounted 355kW–630kW: External DC reactor required.

Cabinet-type 355kW–635kW: DC reactor built into bottom cabinet.

3.4 Keyboard Base Outline Drawing & Installation Hole Dimensions

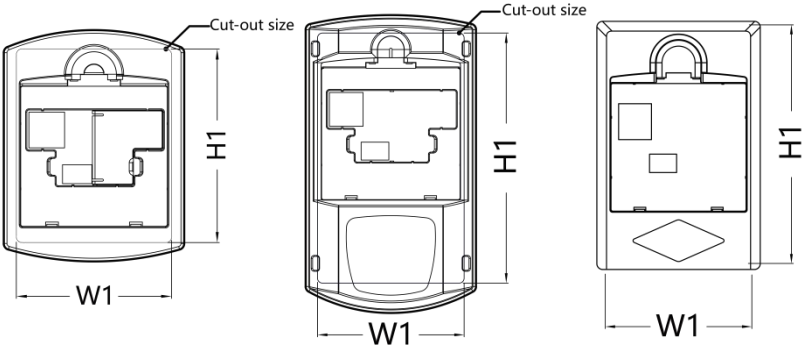

OPT1-Keypad Base 1 OPT2-Keypad Base 2 OPT3-Keypad Base 3

Picture 3-1 Keyboard Base Appearance

OPT1：Regular external small base;

OPT2：Regular external big base; 350KW above build-in standard base;

Model	Installation Hole Dimension**(mm)**	
	W1	**H1**
OPT1(Keypad base 1）	73.5	91.5
OPT2(Keypad base2）	73.5	125.5
OPT3(Keypad base3）	78	122

Chapter 4 Technical Data sheet

4.1 Electrical Parameter

Single Phase 220V~240V

Item		Specification				
Power（kW）		0.4	0.75	1.5	2.2	4.0
Dimension		A1				A2
output	Motor Power（kW）	0.4	0.75	1.5	2.2	4.0
	Rated Output Current (A)	2.3	4	7	9.6	17
	Output Voltage (V)	Three-phase, 0 to input voltage				
	Maximum Output Frequency	599Hz(adjustable via parameters)				
	Carrier Frequency	0.5kHz~16.0kHz				
	Overload Capacity	150% rated current for 60s				
Input	Rated Input Current (A)	5.4	8.2	14	23	32
	Rated Voltage, Rated Frequency	AC: single phase 220V~240V,50/60Hz				
	Permitted Voltage Fluctuation Range	-15%~10%,Actual range:AC187V~264V				
	Permitted Frequency Fluctuation Range	-5%~5%,Actual range:47.5Hz~63Hz				
	Power Supply Capacity (kVA)	1.4	2.2	3.7	6.0	10
IP Rating		IP20(open type, IP rating applies to IEC-compliant products)				

Three phase 220V~240V

Item		Specification						
Power(KW)		0.4	0.75	1.5	2.2	4.0	5.5	7.5
Dimension		A1				A2	A3	
Output	Motor Power (KW)	0.4	0.75	1.5	2.2	4.0	5.5	7.5
	Rated Output Current (A)	2.1	3.8	7.2	9.0	17	25	32
	Output Voltage (V)	Three-phase, 0 to input voltage						
	Maximum Output Frequency	599Hz(adjustable via parameters)						
	Carrier Frequency	0.5kHz~16.0kHz						
	Overload Capacity	150% rated current for 60s						
Input	Rated Input Current (A)	2.4	4.6	9	11.4	16.7	32	41
	Rated Voltage, Rated Frequency	AC:three-phase220V~240V,50/60Hz						
	Permitted Voltage Fluctuation Range	-15%~10%,Actual range:AC187V~264V						
	Permitted Frequency Fluctuation Range	-5%~5%,Actual range:47.5Hz~63Hz						
	Power Supply Capacity (kVA)	1.1	2.1	4.2	5.3	7.7	14.8	18.9
IP Rating		IP20(open type, IP rating applies to IEC-compliant products)						

Three-Phase 220V~240V

Item		Specification						
Power(KW)		11	15	18	22	30	37	45
Dimension		A4	A5	A6	A7			A8
Output	Motor Power (KW)	11	15	18	22	30	37	45
	Rated Output Current (A)	45	60	75	91	112	150	176
	Output Voltage (V)	Three-phase, 0 to input voltage						
	Maximum Output Frequency	599Hz(adjustable via parameters)						
	Carrier Frequency	0.5kHz~16.0kHz						
	Overload Capacity	150% rated current for 60s						
Input	Rated Input Current (A)	49	57	69	89	106	139	164
	Rated Voltage, Rated Frequency	AC:three-phase220V~240V,50/60Hz						
	Permitted Voltage Fluctuation Range	-15%~10%,Actual range:AC187V~264V						
	Permitted Frequency Fluctuation Range	-5%~5%,Actual range:47.5Hz~63Hz						
	Power Supply Capacity (kVA)	27	31.6	41	51	64	87	102
IP Rating		IP20(open type, IP rating applies to IEC-compliant products)						

Three-Phase 220V~240V

Item		Specification			
Power(KW)		55	75	90	110
Dimension		A9	A10	A11	
Output	Motor Power (KW)	55	75	90	110
	Rated Output Current (A)	210	304	380	426
	Output Voltage (V)	Three-phase, 0 to input voltage			
	Maximum Output Frequency	599Hz(adjustable via parameters)			
	Carrier Frequency	0.5kHz~16.0kHz			
	Overload Capacity	150% rated current for 60s			
Input	Rated Input Current (A)	196	307	385	430
	Rated Voltage, Rated Frequency	AC: three-phase220V~240V,50/60HZ			
	Permitted Voltage Fluctuation Range	-15%~10%,Actual range:AC187V~264V			
	Permitted Frequency Fluctuation Range	-5%~5%,Actual range:47.5Hz~63Hz			
	Power Supply Capacity (kVA)	117	184	202	226
IP Rating		IP20(open type, IP rating applies to IEC-compliant products)			

Three- Phase 220V~240V

Item		Specification			
Power(KW)		132	160	200	220
Dimension		A12	A13	A15	
Output	Motor Power (KW)	132	160	200	220
	Rated Output Current (A)	465	585	725	820
	Output Voltage (V)	Three-phase, 0 to input voltage			
	Maximum Output Frequency	599Hz(adjustable via parameters)			
	Carrier Frequency	0.5kHz~16.0kHz			
	Overload Capacity	150% rated current for 60s			
Input	Rated Input Current (A)	468	590	714	810
	Rated Voltage, Rated Frequency	AC: three-phase220V~240V,50/60HZ			
	Permitted Voltage Fluctuation Range	-15%~ 10%,Actual range:AC187V~264V			
	Permitted Frequency Fluctuation Range	-5%~5%,Actual range:47.5Hz~63Hz			
	Power Supply Capacity (kVA)	246	310	413	464
IP Rating		IP20(open type, IP rating applies to IEC-compliant products)			

Three- Phase 380V~480V

Item		Specification						
Power(KW)		0.7	1.5	2.2	4.0	5.5	7.5	11
Dimension		A1			A2		A3	
Output	Motor Power (KW)	0.7	1.5	2.2	4.0	5.5	7.5	11
	Rated Output Current (A)	2.1	3.8	5.1	9.0	13.0	17	25
	Output Voltage (V)	Three-phase,0 to input voltage						
	Maximum Output Frequency	599Hz(adjustable via parameters)						
	Carrier Frequency	0.5kHz~16.0kHz						
	Overload Capacity	150%额定电流60S						
Input	Rated Input Current (A)	3.4	5.0	5.8	10.5	14.6	20.5	26.0
	Rated Voltage, Rated Frequency	Three-phase, 0 to input voltage						
	Permitted Voltage Fluctuation Range	599Hz(adjustable via parameters)						
	Permitted Frequency Fluctuation Range	0.5kHz~16.0kHz						
	Power Supply Capacity (kVA)	1.5	3.0	4.0	5.9	8.9	11.0	14
IP Rating		IP20(open type, IP rating applies to IEC-compliant products)						

Three- Phase 380V~480V

Item		Specification						
Power(KW)		15	18.5	22	30	37	45	55
Dimension		A4		A5	A6		A7	
Output	Motor Power (KW)	15	18.5	22	30	37	45	55
	Rated Output Current (A)	32	37	45	60	75	91	112
	Output Voltage (V)	Three-phase, 0 to input voltage						
	Maximum Output Frequency	599Hz(adjustable via parameters)						
	Carrier Frequency	0.5kHz~16.0kHz						
	Overload Capacity	150% rated current for 60s						
Input	Rated Input Current (A)	35.0	38.5	46.5	62.0	76.0	92	113.0
	Rated Voltage, Rated Frequency	AC: three-phase220V~240V,50/60HZ						
	Permitted Voltage Fluctuation Range	-15%~10%,Actual range:AC187V~264V						
	Permitted Frequency Fluctuation Range	-5%~5%,Actual range:47.5Hz~63Hz						
	Power Supply Capacity (kVA)	19	21	24	33	40	48	59
IP Rating		IP20(open type, IP rating applies to IEC-compliant products)						

Three- Phase 380V~480V

Item		Specification						
Power(KW)		45	55	75	90	110	132	160
Dimension		A7		A8		A9	A10	
Output	Motor Power (KW)	45	55	75	90	110	132	160
	Rated Output Current (A)	91	112	150	176	210	253	304
	Output Voltage (V)	Three-phase, 0 to input voltage						
	Maximum Output Frequency	599Hz(adjustable via parameters)						
	Carrier Frequency	0.5kHz~16.0kHz						
	Overload Capacity	150% rated current for 60s						
Input	Rated Input Current (A)	92	113.0	157	180	214	256	307
	Rated Voltage, Rated Frequency	AC: three-phase220V~240V,50/60HZ						
	Permitted Voltage Fluctuation Range	-15%~10%,Actual range:AC187V~264V						
	Permitted Frequency Fluctuation Range	-5%~5%,Actual range:47.5Hz~63Hz						
	Power Supply Capacity (kVA)	48	59	82	95	112	134	161
	IP Rating	IP20(open type, IP rating applies to IEC-compliant products)						

Three- Phase 380V~480V

Item		Specification						
Power(KW)		185	200	220	250	280	315	355
Dimension		A11			A12	A13		A14
Output	Motor Power (KW)	185	200	220	250	280	315	355
	Rated Output Current (A)	340	377	426	465	520	585	650
	Output Voltage (V)	Three-phase, 0 to input voltage						
	Maximum Output Frequency	599Hz(adjustable via parameters)						
	Carrier Frequency	0.5kHz~16.0kHz						
	Overload Capacity	150% rated current for 60s						
Input	Rated Input Current (A)	350	385	430	468	525	590	665
	Rated Voltage, Rated Frequency	AC: three-phase220V~240V,50/60HZ						
	Permitted Voltage Fluctuation Range	-15%~10%,Actual range:AC187V~264V						
	Permitted Frequency Fluctuation Range	-5%~5%,Actual range:47.5Hz~63Hz						
	Power Supply Capacity (kVA)	184	202	226	246	276	310	345
IP Rating		IP20(open type, IP rating applies to IEC-compliant products)						

Three- Phase 380V~480V

Item		Specification						
Power(KW)		400	450	500	560	630	710	800
Dimension		A15		A16			A17	
Output	Motor Power (KW)	400	450	500	560	630	710	800
	Rated Output Current (A)	725	800	860	950	1140	1300	1500
	Output Voltage (V)	Three-phase, 0 to input voltage						
	Maximum Output Frequency	599Hz(adjustable via parameters)						
	Carrier Frequency	0.5kHz~16.0kHz						
	Overload Capacity	150% rated current for 60s						
Input	Rated Input Current (A)	714	830	900	960	1140	1315	1525
	Rated Voltage, Rated Frequency	AC: three-phase220V~240V,50/60HZ						
	Permitted Voltage Fluctuation Range	-15%~10%,Actual range:AC187V~264V						
	Permitted Frequency Fluctuation Range	-5%~5%,Actual range:47.5Hz~63Hz						
	Power Supply Capacity (kVA)	413	464	500	526	600	692	802
IP Rating		IP20(open type, IP rating appli es to IEC-compliant products)						

4.2 Technical Specifications

Drive Technical Specifications

ITEM		SPECIFICATION		
BASIC FUNCTIONS	Maximum Output Frequency	Vector control mode：0~599Hz; V/F Control Mode：0~599Hz		
	Carrier Frequency	0.5kHz~16kHz, automatically adjusted according to load characteristics		
	Frequency Accuracy	Digital setting：0.01Hz; Analog setting: maximum frequency×0.025%		
	Control Mode	V/F Control Sensor-less Vector Control(SVC) ; Field-Oriented Vector Control with Speed Sensor(FVC)		
	Starting Torque	G Type:0.5Hz/150%(SVC)；0Hz/180%(FVC) P Type:0.5Hz/100%		
	Speed Control Range	1:100(SVC) 1:1000(FVC)		
	Speed Control Precision	±0.5%(SVC)±0.02%(FVC)		
	Torque Control Precision	±5%(FVC)		
	Overload Capacity	G Type P Type	150% 60s 120% 60s	180% 5S 150% 5S
	Torque Boost	Automatically torque boost; manually torque boost:0.1%~30.0%		
	V/F Curve	Three types: linear, multiple point and square type (1.2 power, 1.4power, 1.6 power, 1.8 power, square)		
	V/F Separate	Two types: completely separate and partially separate		
	Acceleration/deceleration mode	Straight line or S curve; four kinds of acceleration/deceleration time, range: 0.0s~6500.0s		
	DC Braking	DC braking frequency:0.00Hz~maximum frequency, braking time:0.0s~36.0s braking current:0.0%~100.0%		
	Jog Operation	Jog operation frequency：0.00Hz~50.00Hz。 Jog acceleration/deceleration time：0.0s~6500.0s。		
	Simple PLC & multi-step speed operation	realize maximum of 16 multi-step speeds running by built-in PLC or control terminals.		
	Build-in PID	Easily deploy closed-loop process control system		
	Automatic voltage regulation (AVR function)	When the grid voltage fluctuations, the system employs an automatic voltage regulation mechanism to ensure a stable and consistent output voltage		
	Over-voltage & over-current stall control	The system automatically restricts current and voltage during operation to prevent frequent over-current and over-voltage tripping		

	Fast current limit function	The system maximizes the reduction of over-current faults to protect the drive and ensure its normal operation
	Torque limit and control	The "excavator" feature automatically limits torque during operation to prevent frequent over-current tripping; the closed-loop vector mode enables torque control.
PERSONALIZED FUNCTIONS	Excellent control performance	Achieve asynchronous and synchronous motor control with high-performance current vector control technology
	Keep running while temporary power off	Maintaining Drive Operation During Momentary Power Outages via Load Energy Feedback
	Rapid current limiting	To avoid frequent over-current faults of the drive
	Virtual IO	5 sets of virtual DIDO to realize simple logic control
	Timing function	Timing control: Time range0.0Min~6500.0Min
	Multiple motors switching	Two groups of motor parameters, can realize 2 motors switching control
	Overheat protection for motor	Optional motor overheating expansion card can accept input from motor temperature sensor.
	Multiple encoders compatible	Support differential encoder, open-collector encoder etc.
	Operation control mode	Keypad control, Terminal control, Serial communication control (Modbus), multi-way to switch the control mode
	Frequency setting method	10 frequency setting method: Digital setting, analog voltage setting, analog current setting, pulse setting, serial port setting. Can be switched through multiple methods.
	Auxiliary frequency Setting method	10 methods to realize the auxiliary frequency fine tuning and combine.
	Input terminals	Standard Input Terminals： 5 DI digital input terminal (DI1~DI5)，DI5 support high speed pulse maximum input of 100khz (need to specify while order)。 2 analog input terminal (AI1~AI2), AI1 support 0~10V voltage input only; AI2 support 0~10V voltage or 4~20mA current input) Expansion Input Terminal： 5 digital input terminal (DI6~DI10) 1 analog input terminal (AI3), support-10~+10V input and PT100\PT1000（optional）
	Output terminals	Standard Output Terminal： 1 digital output terminal (DO1), 1 relay output terminal (TA1-TB1-TC1) 1 analog output terminal (AO1), support 0~10、0~20mA current output Expansion output terminal： 1 analog output terminal (AO2), support 0~20mA current or 0-10V voltage output; 2 relay output terminal (TA2-TB2-TC2~TA3-TB3-TC3)
Communication	RS485 communication terminal	RS485 communication interface, support Modbus-RTU communication protocol

Display and Keypad Function	LED dual display keypad	Monitor the drive status parameters
	Key lock and function define	Key lock, partially lock or define the function ranges of keys to avoid operation mistakes.
	Protection Function	over-current, over-voltage, under-voltage, overheating, default phase, overload, shortcut, etc.,
	Expansion Accessories	Braking parts, IO expansion card、communication expansion card、Bus expansion card、PG expansion card
	Installation Site	Indoor, without direct sunshine, without dust, corrosive gases, inflammable gases, oil mist, steam, water drop or salinity etc.
Environment	Altitude	≤1000M: output rated power, ＞1000M: output derated
	Working Temperature	-10℃~+40℃（between 40℃~50℃ output derated）
	Humidity	Below 95%RH (no condensing)
	Vibration	Below 5.9m/(s~2)(0.6g)
	Storage temperature	-20℃~＋60℃

4.3 Optional Accessories

The following optional accessories are available to extend the functionality of the drive. Please specify requirements at the time of ordering.

Name	Model	Function	Remarks
Built-in Braking Unit	Suffix "B" in product code (e.g., XXX-B)	Standard for 0.7–22kW drives	
External Braking Unit	Braking Unit	Dissipates regenerative energy via resistor for braking	
Energy Feedback Unit	Regenerative Unit	Feeds regenerative energy back to the grid	
I/O Expansion card	EMIO-A	1× Analog Output, 1× Relay Output	
	EMIO-B	1× High-speed Pulse Output, 1× Relay Output	
	EMIO-C	1× Analog Output, 1× High-speed Pulse Output	
	EMIO-D	2× Relay Outputs	
	EMIO-E	1× Analog Input (PT100/-10~+10V), 1× Analog Output, 1× Relay Output	
	EMIO-F	1× High-speed Pulse Output	
	EM485-01	Isolated RS-485 Communication	
	EMIO-G	Isolated RS-485 + PT100 Temp. + 1× Analog Output	

	EMIO-H	Isolated RS-485 + PT100 Temp. + 1× Relay Output	
CAN BUS	EMCAN-01	CANLINK/Master-Slave Control	
PROFINET	EMPN-01	PROFINET Bus Interface	
EtherCAT	EMECAT-01	EtherCAT Bus Interface	
Open-collector Encoder Card	EMPG-01	Supports open-collector/push-pull encoder input	
Differential Encoder Card	EMPG-02	Supports differential/open-collector/push-pull encoder input	
Resolver & Temp. Card	EMPG-03	PT100/PT1000/KTY84 temp. + PTC130 overheat protection	
Differential Encoder + PT100	EMPG-04	Differential encoder + PT100 temp. input	
ED Dual-Display Keypad	OP-02	Dual-row LED display, external mounting	RJ45 interface

4.4 Braking Component Selection Guide

Users can select different resistor values and power ratings based on actual application requirements (however, the resistance must not be lower than the recommended values in the table, while the power rating can be higher). The selection of braking resistors depends on the regenerative power generated by the motor in the system, which is influenced by factors such as system inertia, deceleration time and potential energy load (e.g., vertical motion). The selection Principles are higher system inertia requires lower resistance and higher power braking resistor. Shorter deceleration time requires higher power braking resistor. Frequent braking cycles requires higher power and better heat dissipation.

4.1.1 Resistance value Selection

During braking, nearly all regenerative energy from the motor is dissipated by the braking resistor.

Key Formula: $\frac{U^2}{R} = P_b$

Where:

■U = Braking voltage under stable braking conditions. (For 380V AC systems, typically 700V)

■R = Braking resistor value (Ω)

■P_b = Braking power (W)

Note: The resistance value must not be lower than the minimum recommended value to prevent over-current damage.

4.1.2 Braking Resistor Power Selection

Key Formula: 0.7×Pr=Pb×D0.7×*Pr*=*Pb*×*D*

Where:

- Pr= Resistor power rating (W)
- D= Braking duty cycle (proportion of regenerative braking in the total cycle)

Typical Duty Cycles (*D*):

Application	**Duty Cycle (D*D*)**
Elevators	20%–30%
Unwinding/Winding	20%–30%
Centrifuges	50%–60%
Occasional braking	5%
General use	**10%** (default)

Braking Component Selection Guide for Drives

Drive Model No.	Recommended Power (kW)	Recommended Resistance (Ω)	Matching Braking Unit	Remark
VA-4TR75GB/1R5PB	150W	≥300Ω	Standard build-in	
VA-4T1R5GB/2R2PB	150W	≥220Ω		
VA-4T2R2GB/004PB	250W	≥200Ω		
VA-4T004GB/5R5PB	300W	≥130Ω		
VA-4T5R5GB/7R5PB	400W	≥90Ω		
VA-4T7R5GB/11PB	500W	≥65Ω		
VA-4T011GB/15PB	800W	≥43Ω		
VA-4T015GB/18R5PB	1000W	≥32Ω		
VA-4T018R5GB/22PB	1300W	≥25Ω		
VA-4T022GB/30PB	1500W	≥22Ω		
VA-4T030G/037P	2500W	≥16Ω	External	
VA-4T037G/045P	3.7kW	≥16Ω		
VA-4T045G/055P	4.5kW	≥16Ω		
VA-4T055G/075P	5.5kW	≥8Ω		
VA-4T075G/090P	7.5kW	≥8Ω		
VA-4T090G/110P	4.5kW*2	≥8Ω*2		
VA-4T110G/132P	5.5kW*2	≥8Ω*2		
VA-4T132G/160P	6.5kW*2	≥8Ω*2		
VA-4T160G/185P	16kW	≥2.5Ω		
VA-4T185G/200P	20kW	≥2.5Ω		
VA-4T200G/220P	20kW	≥2.5Ω		
VA-4T220G/250P	22kW	≥2.5Ω		
VA-4T250G/280P	12.5kW*2	≥2.5Ω*2		
VA-4T280G/315P	14KW*2	≥2.5Ω*2		
VA-4T315G/350P	16KW*2	≥2.5Ω*2		
VA-4T350G/400P	17KW*2	≥2.5Ω*2		
VA-4T400G/450P	14KW*3	≥2.5Ω*3		
VA-4T450G/500P	15KW*3	≥2.5Ω*3		
VA-4T500G/560P	17KW*3	≥2.5Ω*3		
VA-4T560G/630P	20KW*3	≥2.5Ω*3		
VA-4T630G/710P	25KW*3	≥2.5Ω*3		

VA-2S0R4GB	80W	≥200Ω	Standard build-in	
VA-2SR75GB	80W	≥150Ω		
VA-2S1R5GB	100W	≥100Ω		
VA-2S2R2GB	100W	≥70Ω		
VA-2S004GB	500W	≥65Ω		
VA-2T0R4GB	90W	≥300Ω		
VA-2TR75GB	160W	≥170Ω		
VA-2T1R5GB	340W	≥80Ω		
VA-2T2R2GB	500W	≥55Ω		
VA-2T004GB	800W	≥33Ω		
VA-2T5R5GB	1300W	≥22Ω		
VA-2T7R5GB	1700W	≥16Ω		
VA-2T011GB	2300W	≥12Ω		
VA-2T015GB	3000W	≥9Ω		
VA-2T18R5GB	3900W	≥7Ω	External	
VA-2T022GB	4600W	≥6Ω		
VA-2T030GB	5500W	≥5Ω		
VA-2T037G	6800W	≥4Ω		
VA-2T045G	5000W	≥5.4Ω		
VA-2T055G	6000W	≥4.4Ω		
VA-2T075G	9kW	≥2.5Ω		
VA-2T090G	12.5kW	≥2.5Ω		
VA-2T110G	15kW	≥2.5Ω		
VA-2T132G	12.5kW*2	≥2.5Ω*2		
VA-2T160G	14KW*2	≥2.5Ω*2		
VA-2T200G	15KW*2	≥2.5Ω*2		
VA-2T220G	17KW*2	≥2.5Ω*2		

Chapter 5: Installation and Wiring

5.1 Mechanical Installation

5.1.1 Installation Environment

1.Ambient Temperature: The surrounding temperature significantly impacts the drive's lifespan. The operating temperature must not exceed the permissible range: -10°C to 50°C. If the temperature exceeds 50°C, derate the drive by 1.5% for every 1°C increase.

2.Mounting Surface & Heat Dissipation:

Install the drive on a flame-retardant surface with sufficient clearance for heat dissipation.

The drive generates substantial heat during operation.

Secure it vertically to the mounting bracket using screws.

3.Vibration Avoidance:

Install the drive in a low-vibration environment (≤ 0.6G).

Keep it away from high-impact equipment (e.g., punch presses).

4.Environmental Protection:

Avoid direct sunlight, moisture, or condensation.

Do not install in areas with corrosive, flammable, or explosive gases.

Avoid oily, dusty, or metal-particle-laden environments.

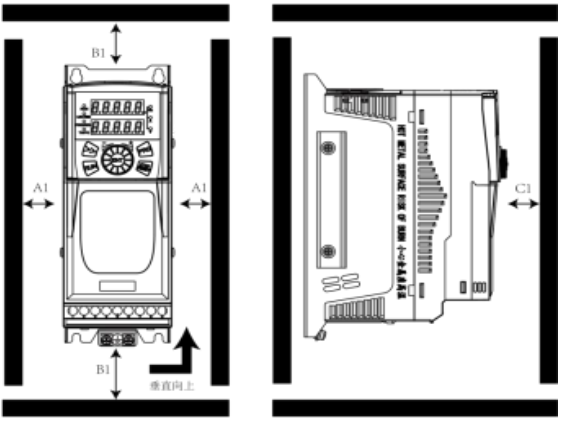

Picture 5-1 Drive Installation Diagram

Single Unit Installation:

For Drives ≤ 22kW:No minimum clearance requirements apply.

For Drives > 22kW:Maintain a minimum clearance (A ≥ 50mm) around the drive for proper heat dissipation.

Vertical (Stacked) Installation

When installing drives vertically (one above the other), an insulating airflow baffle (as shown in the diagram) must be installed to prevent heat buildup.

Power Rate	Installation Dimension		
	A1	B1	C1
≤15kW	No Requirement	B1≥100mm	C1≥40
18.5kW—30kW	A1≥50mm	B1≥200mm	C1≥40
≥37kW	A1≥50mm	B1≥300mm	C1≥40

5.1.2 Mechanical Installation (Heat Dissipation Guidelines)

To ensure proper thermal management, adhere to the following installation requirements:

1.**Orientation & Mounting**:

Install the drive vertically in the standard upright position (do not invert) to allow heat to rise naturally.

For multiple drives, prioritize side-by-side arrangement.

If vertical stacking is unavoidable, install the thermal insulation baffle (refer to the diagram).

2.**Clearance & Spacing**:

Maintain the minimum clearance specified in the diagram to ensure adequate airflow.

Consider the heat dissipation needs of other cabinet components during layout planning.

3.**Mounting Bracket Material**:

Use flame-retardant mounting brackets exclusively.

4.**Environments with Metal Dust**:

For applications involving metal dust, adopt an external heatsink mounting method.

Ensure the cabinet interior is fully sealed and maximize its internal volume to mitigate overheating risks.

5.2 Electrical Installation

5.2.1 Peripheral Electrical Component Selection Guide

Drive optional electrical accessories selection guide

Model No.	Circuit Breaker (MCCB) (A)	Recommended contactor (A)	Recommended Input Power Cable mm²	Recommended Output Motor Cable mm²	Recommended Control Wiring mm²
VA-4TR75GB/1R5PB	10	10	2.5	2.5	1.0
VA-4T1R5GB/2R2PB	16	10	2.5	2.5	1.0
VA-4T2R2GB/004PB	16	10	2.5	2.5	1.0
VA-4T004GB	25	16	4.0	4.0	1.0

VA-4T004GB/5R5PB	25	16	4.0	4.0	1.0
VA-4T5R5GB/7R5PB	32	25	4.0	4.0	1.0
VA-4T7R5GB	40	32	4.0	4.0	1.0
VA-4T7R5GB/11PB	40	32	4.0	4.0	1.0
VA-4T011GB/15PB	63	40	4.0	4.0	1.0
VA-4T015GB	63	40	6.0	6.0	1.0
VA-4T015GB/18R5PB	63	40	6.0	6.0	1.0
VA-4T018R5GB/22PB	100	63	6	6.0	1.0
VA-4T022GB	100	63	10	10	1.0
VA-4T022GB/30PB	100	63	10	10	1.0
VA-4T030GB	125	100	16	10	1.0
VA-4T030G/037P	125	100	16	10	1.0
VA-4T037G/045P	160	100	16	16	1.0
VA-4T045G/055P	200	125	25	25	1.0
VA-4T055G/075P	200	125	35	25	1.0
VA-4T075G	250	160	50	50	1.0
VA-4T075G/090P	250	160	50	50	1.0
VA-4T090G/110P	250	160	70	70	1.0
VA-4T110G/132P	350	350	120	120	1.0
VA-4T132G/160P	400	400	150	150	1.0
VA-4T160G/185P	500	400	95*2	95*2	1.0
VA-4T185G/200P	600	600	120*2	120*2	1.5
VA-4T200G/220P	600	600	120*2	120*2	1.5
VA-4T220G/250P	600	600	150*2	150*2	1.5
VA-4T250G/280P	800	600	150*2	150*2	1.5
VA-4T280G/315P	800	800	185*2	185*2	1.5
VA-4T315G/350P	800	800	185*2	185*2	1.5
VA-4T350G/400P	800	800	120*4	120*4	1.5
VA-4T400G/450P	1000	1000	120*4	120*4	1.5
VA-4T450G/500P	1200	1200	120*4	120*4	1.5
VA-4T500G/560P	1200	1200	150*4	150*4	1.5
VA-4T560G/630P	1200	1200	185*4	185*4	1.5
VA-4T630G/710P	1500	1500	185*4	185*4	1.5

5.2.2. Peripheral Electrical Components Usage Guidelines

Peripheral Electrical Components Usage Guidelines

Component	Installation Location	Function
Circuit Breaker (MCCB)	Upstream of input circuit	Provides overcurrent protection by disconnecting power in case of downstream equipment faults.
Contactor	Between circuit breaker and drive input	Controls power supply to the drive. Avoid frequent power cycling (>2 operations per minute) or direct motor starting via contactor.
AC Input Reactor	Drive input side	- Improves input power factor. - Effectively suppresses high-order harmonics, preventing voltage distortion that may damage other equipment. - Balances input current caused by phase imbalance.
EMC Input Filter	Drive input side	- Reduces conducted/radiated interference from the drive. - Minimizes power supply noise, enhancing drive immunity.
DC Reactor	In series with DC bus (+)	- Improves input power factor. - Enhances system efficiency and thermal stability. - Mitigates harmonic effects on the drive and reduces external interference.
AC Output Reactor	Between drive output and motor (close to drive)	- Drive outputs contain significant harmonics. Long motor cables (>100m) introduce distributed capacitance, which may cause resonance: - Damages motor insulation over time. - Increases leakage current, triggering drive protection.

5.3 Drive Main Power Circuit Wiring Method

Drive Main Power Circuit Wiring Method

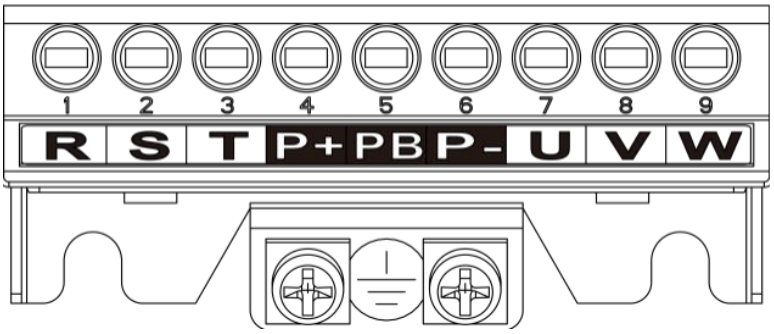

Picture 5-2 A1~A2 Main Power Circuit Wiring terminal

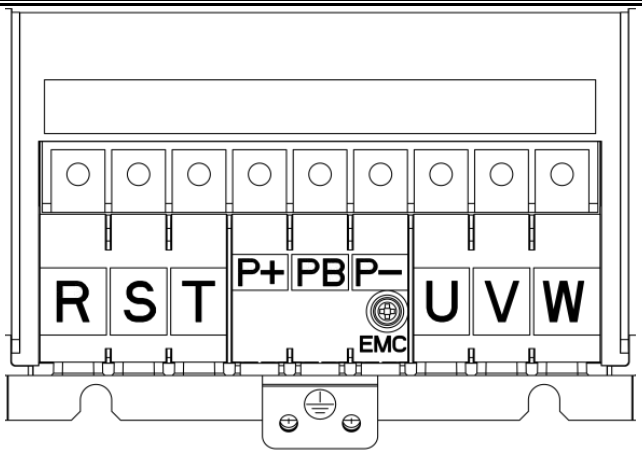

Picture 5-3 A3~A5 Main Power Circuit Wiring terminal

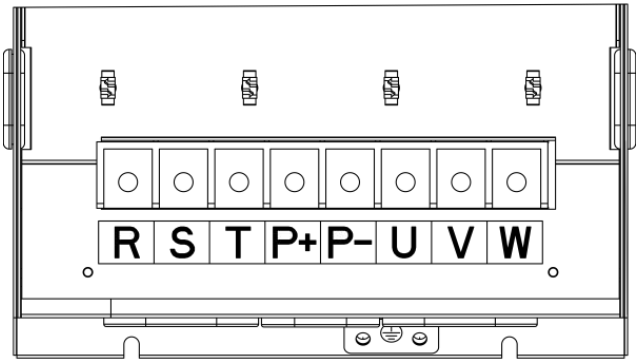

Picture 5-4 A6 Main Power Circuit Wiring terminal

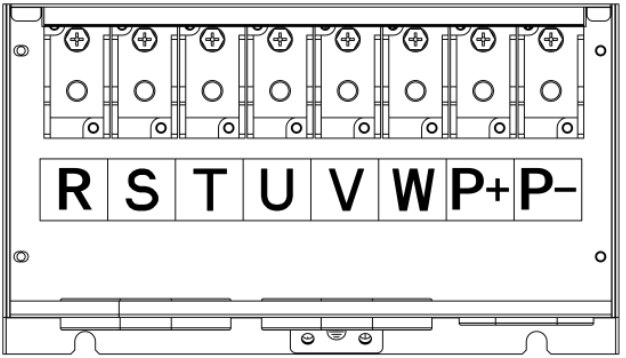

Picture 5-5 A7 Main Power Circuit Wiring terminal

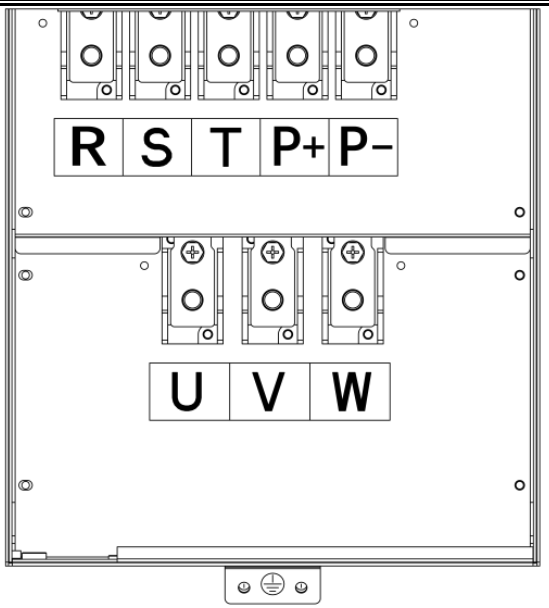

Picture 5-6 A8~A9 Main Power Circuit Wiring terminal

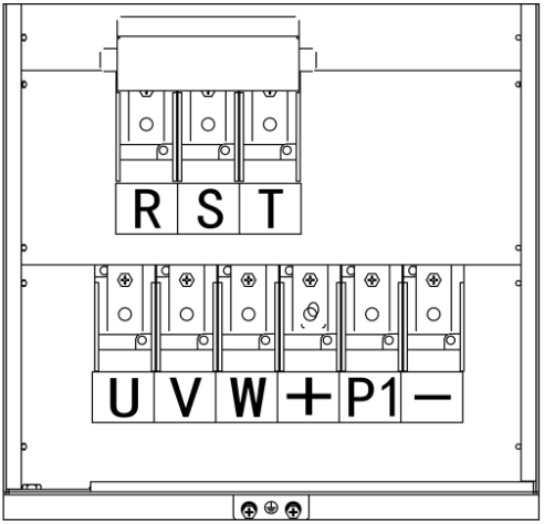

Picture 5-7 A10 Main Power Circuit Wiring terminal

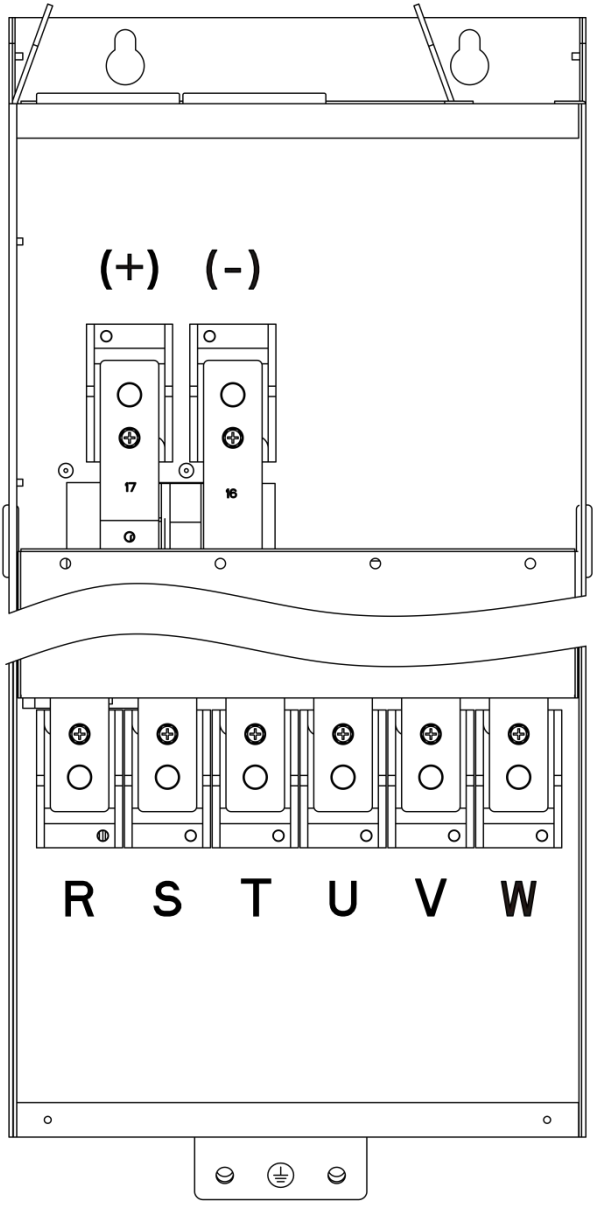

Picture 5-8 A11 Main Power Circuit Wiring terminal

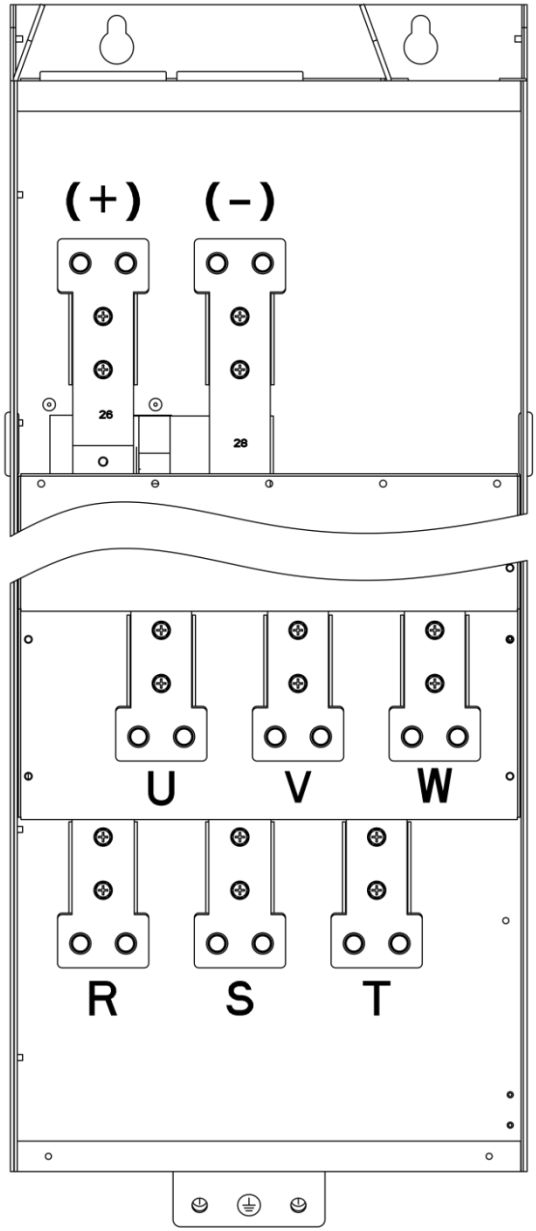

Picture 5-9 A12~A13 Main Power Circuit Wiring terminal

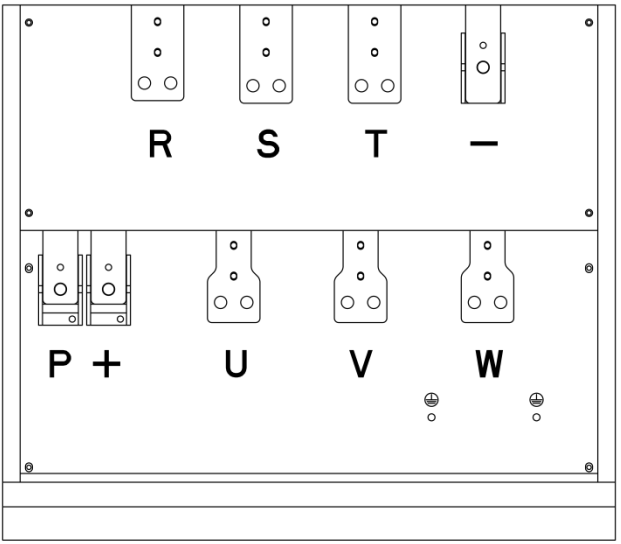

Picture 5-10 A14 Main Power Circuit Wiring terminal

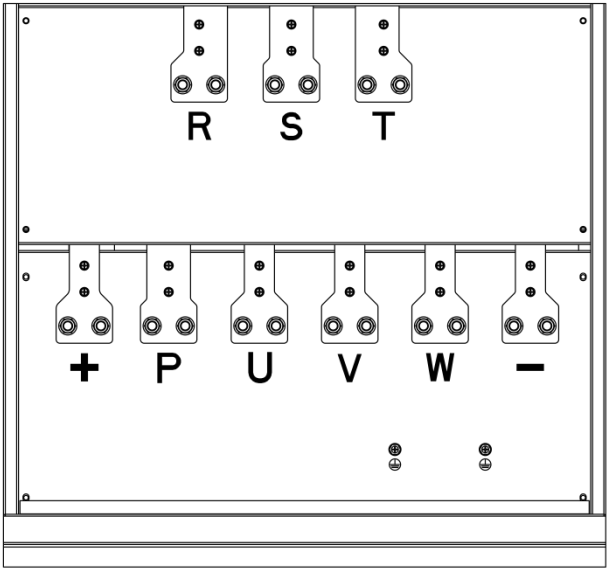

Picture 5-11 A15 Main Power Circuit Wiring terminal

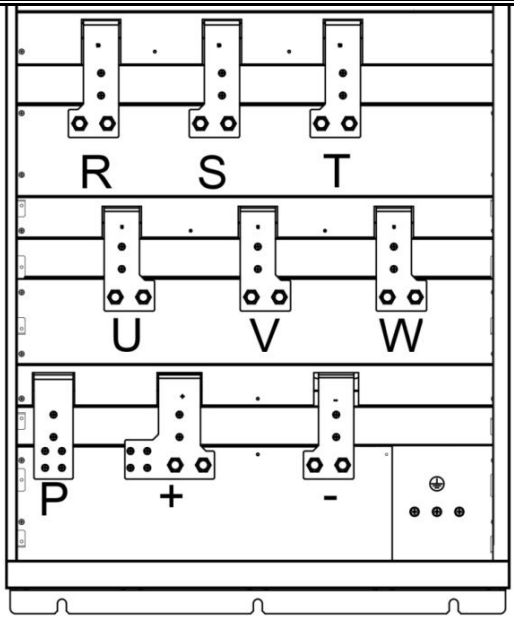

Picture 5-12 A16 Main Power Circuit Wiring terminal

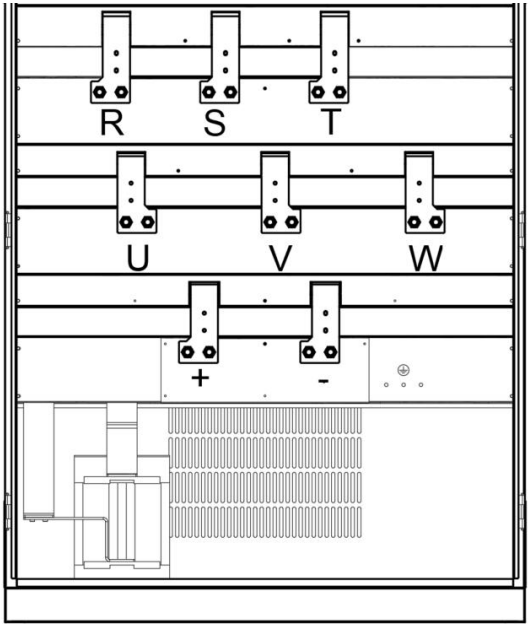

Picture 5-13 A17 Main Power Circuit Wiring terminal

5.3.1 Drive Main Power Circuit Terminal Specifications

Drive Main Power Circuit Terminal Specifications

Terminal sign	Name	Specification
R、S、T	Three-Phase Power Input Terminals	AC Input Three-Phase Power Connection Point
P+(+)、P－(－)	DC Bus Positive/Negative Terminals	DC Bus Connection Point / External Braking Unit)
P+、PB	Braking Resistor Connection Terminals	External Braking Resistor Connection Point (Models with Built-In Braking Unit)
P（P1)、P+	External Reactor Terminals	External DC Reactor Connection Point
U、V、W	driver output terminal	Three-Phase Motor Connection
⏚	Grounding Terminal	Grounding Terminal

Wiring instructions：

1)Input Power Terminals (R, S, T)Connect the driver's input side to the power supply. No specific phase sequence is required.

2)DC Bus Terminals (P+, P-)Caution: Residual voltage may remain at the P+ and P- terminals immediately after power-off. Verify voltage is below 36V before handling to avoid electric shock.

For models above 30 kW with an external braking unit, ensure correct P+ and P- polarity. Reversing polarity may damage the driver or cause a fire.Wiring length for the braking unit must not exceed 10 m. Use twisted-pair or tightly paired parallel wiring.

Do not connect a braking resistor directly to the DC bus, as this may damage the driver or result in a fire.

3)Braking Resistor Terminals (P+, PB)Applicable only to models 22 kW and below with a built-in braking unit.Select braking resistor based on recommended values, with wiring length under 5 m. Exceeding this may damage the driver.

4)External Reactor Terminals (P, P+)Models 185–315 kW include a standard built-in DC reactor.Models 355–630 kW require a standard external DC reactor.Models 700–800 kW feature a standard built-in DC reactor.

5)Driver Output Terminals (U, V, W)Do not connect capacitors or surge suppressors to the output side, as this may trigger frequent protection trips or damage the driver.Long motor cables may cause electrical resonance due to distributed capacitance, potentially damaging motor insulation or triggering overcurrent protection. For cable lengths exceeding 100 m, install an AC output reactor.

6)Grounding TerminalEnsure reliable grounding with a ground resistance below 0.1 Ω. Improper grounding may cause abnormal operation or equipment damage.

Do not share the grounding terminal with the power supply neutral (N) terminal.

5.4 CM (control module) wring instruction

5.4.1 Control Circuit Terminal

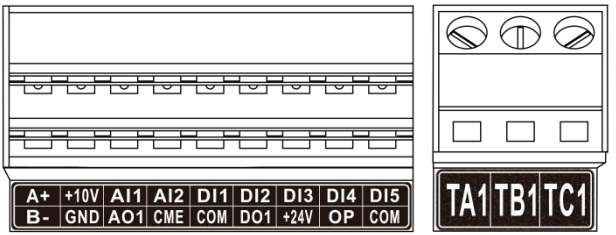

Picture 5-14 Drive Inverter Wiring Diagram

5.4.2 Wiring Diagram

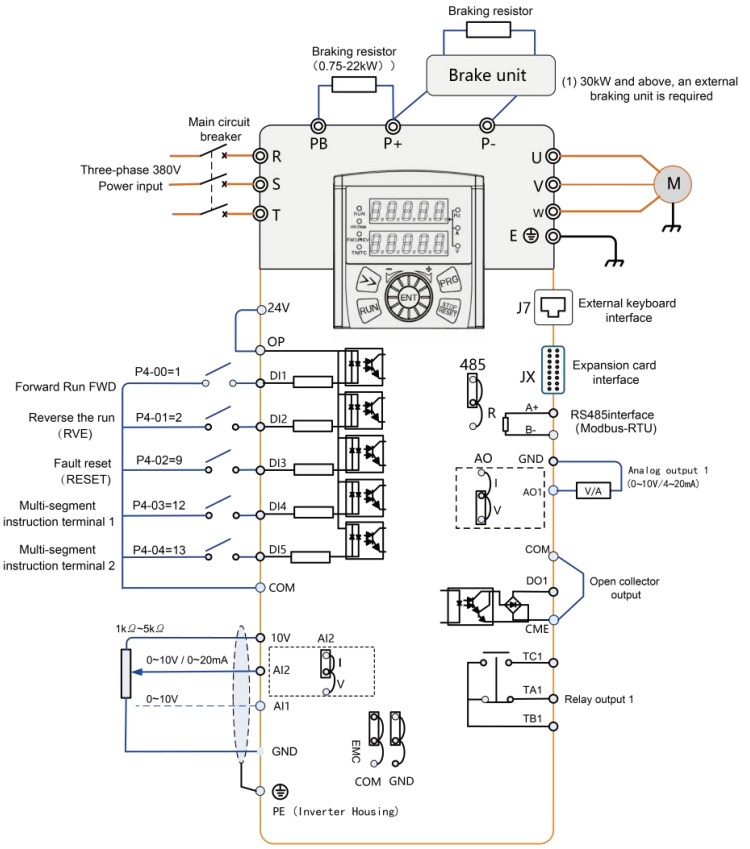

Picture 5-15 Drive Inverter Wiring Diagram

Control Terminal Function Specification：

Type	Terminal Symbol	Terminal Name	Function Specification
Power	+10V-GND	External +10V Power Supply	1.Provide +10V power supply for external units, and the maximum output current is 10mA. 2.It is generally used as the operating power supply for the external potentiometer. The potentiometer resistance range is 1kΩ~5kΩ .
	+24V-COM	External +24V Power Supply	1.Provide +24V power supply for external units. 2.It is generally used as the operating power supply for digital input/output terminals and the external. sensor. The maximum output current is 100mA.
	OP	External Power Input Terminal	Default setting: +24V connection Needs external power supply when using external signal to drive DI1 ~DI5
Analog Input	AI1-GND	Analog Input Terminal 1	1.Input voltage range: DC Ov ~10v 2.Input Resistance: 22kΩ
	AI2-GND	Analog Input Terminal 2	1.Input voltage range: DC 0V ~10V/4mA ~20mA, decided by the J8 jumper on control board. 2.Input Resistance: 22kΩ,current signal is 500Ω。
Digital Input	DI1-COM	Digital Input 1	1. Optocoupler isolation, compatible with bipolar input 2. Input impedance: 4 kΩ ±5% 3. Level input voltage range: 9V to 30V DC
	DI2-COM	Digital Input 2	
	DI3-COM	Digital Input 3	
	DI4-COM	Digital Input 4	
	DI5-COM	Digital Input 5	In addition to DI1 ~DI4 function, also support maximum high speed pulse input of 100KHZ(this function should specify while order.)
Digital Output	DO1-CME	Digital output 1	Optocoupler-Isolated, Bipolar Open-Collector Output. 1.Output Voltage Range: 0V to 24V 2.DC Output Current Range: 0mA to 50mA Attention:The digital output ground (CME) is internally isolated from the digital input ground (COM). Jumper J10 on the control board shorts CME to COM (enables +24V built-in supply for DO1).Must remove J10 when using an external power source for DO1.
	FM-CME	High Speed Pulse Output	High speed pulse output: under function code P5 00 constraint,choose “high speed pulse output”in FM terminal output type, the maximum output frequency is 100KHZ; Open-collector output mode: same as DO1.(optional expansion card)
	AO1-GND	Analog Output 1	Output voltage or current decided by J5 jumper on control board voltage output range: 0V ~10V Current output range: omA ~ 20mA
Relay Output	TA1-TB1	Normally Closed Terminal	Contact Driving Capacity:AC250V/3A, COSO = 0.4. DC30V/1A
	TB1-TC1	Normally Open Terminal	
Relay Output	TA2-TB2	Normally closed terminal	Contact Driving Capacity: AC250V/3A,COSO=0.4, Optional Expansion card: DC30V/1A
	TB2-TC2	Normally open terminal	

Relay Output	TA3-TB3	Normally closed terminal	Contact Driving Capacity: AC250V/3A,COSO = 0 . 4. Optional Expansion card: DC 30V/1AContact Driving Capacity: AC250V/3A,COSO = 0 . 4. Optional Expansion card: DC 30V/1A
	TB3-TC3	Normally open terminal	
Communication	A+-B-	Communication Terminal	RDI485 Communication interface
Expansion Interface	JX	Expansion Function Interface	Expansion card interface(I/O expansion card, communication protocal card, PG card etc.)
	J7	External keypad interface	External keypad

5.4.3 Control Terminal Wiring Instructions

(1) Analog Input Terminals:Shielded Cable Required:Due to the susceptibility of low-voltage analog signals to external interference, shielded cables must be used.Wiring Distance:Keep wiring as short as possible (≤20m). Excessive length increases noise risk.Noise Mitigation (Severe Interference Cases):Install filter capacitors or ferrite cores at the signal source side.Shielding Grounding: The cable shield must be connected to PE (Protective Earth) on the drive side only (do not ground both ends).。

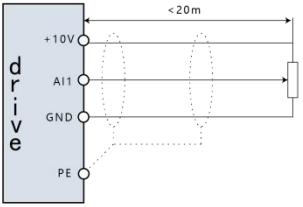

Picture 5-16 Analog Input Terminal Wiring Diagram

When the AI terminal is configured for current signal input, AI serves as the current inflow direction while GND acts as the current return path.

Wiring for Digital Input Terminals DI1~DI6: Sink-Type Connection

Connection Method:

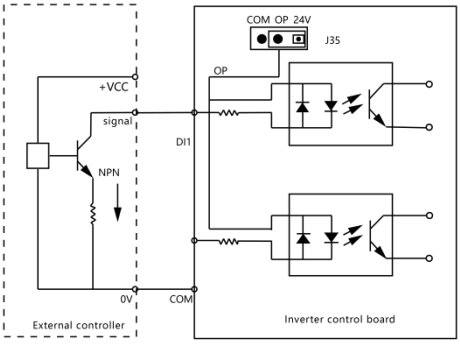

Picture 5-18 Sink-Type Wiring Using the Drive's Internal 24V Power Supply

1. Using the Drive's Internal 24V Power (Most Common Method)

Connection Steps:

Short-circuit the drive's OP (Output Power) and +24V terminals.

Connect the drive's COM (Common) terminal to the external controller's 0V (GND).

Wire the external control signal (e.g., PLC/sensor output) to the desired DI terminal.

2. Using an External 24V Power Supply

Connection Steps:

Remove the jumper between OP and +24V on the drive.

Connect the external 24V+ to the drive's OP terminal.

Connect the external 0V (GND) to the controller's control contact, then to the DI terminal.

Do NOT parallel DI terminals across different drives – may cause false triggering. If parallel connection is unavoidable, add a diode in series with each DI terminal: Diode Specifications: Forward current (IF) > 40mA. Reverse voltage (VR) > 40V. Orientation: Anode (A) → DI terminal, Cathode (K) → Signal source.

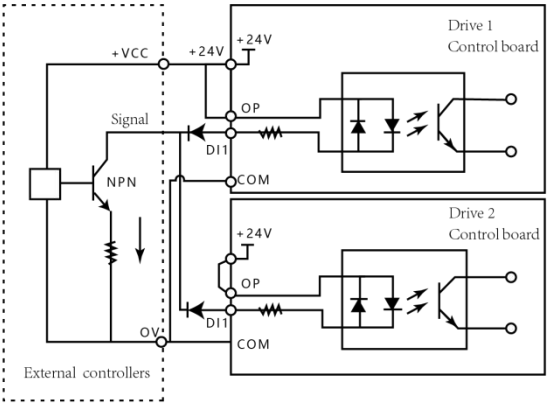

Picture 5-19 Multi-Drive Sink-Type (NPN) Parallel Wiring for Digital Input Terminals

Source-Type (PNP) Wiring Configuration

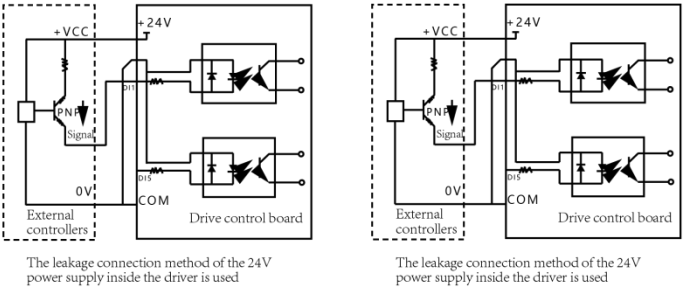

Picture 5-20 Source-Type (PNP) Wiring Configuration

1. Digital Input (DI) Terminal Wiring

(A)Using the Drive's Internal 24V Power Supply Required Steps: Remove the jumper between +24V and OP.Connect OP to COM (common ground).Connect the drive's +24V to the external controller's common terminal (0V).

(B) Using an External 24V Power Supply

Required Steps:Remove the jumper between +24V and OP.Connect OP to the external power supply's 0V (GND).Connect the external 24V+ through the controller's output contact to the DI terminal.

2. Digital Output (DO) Terminal Wiring

(A) Driving a Relay (Critical Protection Required)

Flyback Diode (Absorption Diode) Must Be Installed to prevents voltage spikes from damaging the 24V power supply when the relay coil de-energizes.

Specifications:

Diode Type: 1N4007 or similar (IF ≥1A, VR ≥50V).

Connection:Cathode (K) → 24V+Anode (A) → DO terminal (relay coil side)

Failure Risk:If the diode is missing or reverse-connected, the 24V power supply may fail immediately when the DO turns off.

Drive Capacity Limitation:Max. Load Current: ≤50mA (check relay coil current).

(B) Using External Power for DO (Isolation Required)

Default Factory Setting: CME (DO ground) and COM (DI ground) are externally shorted (DO1 is powered by internal +24V).

When Using External Power, must disconnect the CME-COM shorting link to prevent power conflict.

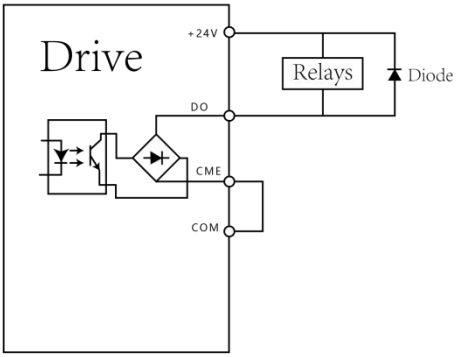

Picture 5-21 Digital Output Terminal Wiring Diagram

Relay output terminal wiring Instructions

Inductive loads (relays, contactors, motors) generate voltage spikes when current is interrupted. To minimize interference, implement the following protection measures like varistor, RC Snubber, Freewheeling Diode etc. See Figure 5-22: "Anti-Interference Treatment for Relay Output Terminals" for proper implementation.

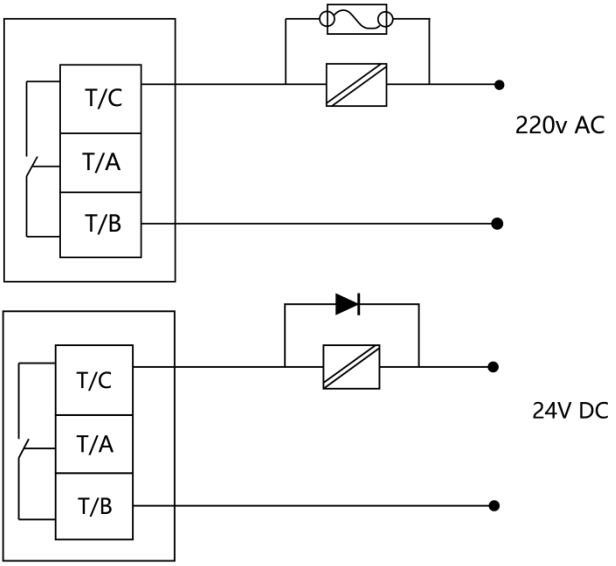

Picture 5-22 Anti-Interference Treatment for Relay Output Terminals

Chapter 6: Operation and Display Examples

6.1 Operator Panel Overview

The operator panel enables users to modify drive function parameters, monitor operational status, execute control commands (start/stop). The panel layout and functional areas are illustrated below:



Picture 6-1 Operator Panel Overview

6.1.1 Function Indicator Lights Descriptions：

RUN:Light Off: Indicates the drive is in standby/stop mode.Light On: Indicates the drive is in operation.

FWD/REV(Forward and Reverse Indicator Light)： Light On: Indicates reverse rotation；

TN/TC (Tuning/Torque Control/Fault):Light On: Torque control mode.Light Slow flashing: Tuning mode.Light Fast flashing: Fault state.

LOC/REM (Local/Remote Control Mode):Light Off: Panel control.Light Steady on: Terminal control.Light Flashing: Communication control.Light Unit Indicators:

Hz: Frequency unit.A: Current unit.V: Voltage unit.RPM (Hz + A): Speed unit.% (A + V): Percentage unit.

Digital Display Area:5-digit LED display showing set frequency, output frequency, monitoring data, and alarm codes.

6.1.2 keyboard button instruction

Button	Name	Function
PRG	Menu	Entry/Exit of Level 1 Menu (Switching between menu and running display interface)
ENT	Confirm	Step into menu screens level by level and confirm parameter settings
 Clockwise	Increasing 	Increment of data or function code
 Counter Clockwise	Decreasing 	Decrement of data or function code
SHIFT	Shift key	In the Stop Display and Run Display interfaces, parameters can be cyclically selected for viewing. During parameter modification, the desired digit can be selected for adjustment.
RUN	Running key	Under keypad control mode, used for operation commands.
STOP/RESET	stop/reset key	During Run Mode: Press to stop operation. During Fault/Alarm State: Used for reset (functionality subject to parameter P7-16 settings).

6.2 Function Code Viewing and Modification Instructions

The drive's parameter configuration follows a three-level menu structure (the operation process refer below picture 6-2):Function Parameter Group (Level 1 Menu)； Function Code (Level 2 Menu)； Function Code Setting Value (Level 3 Menu)

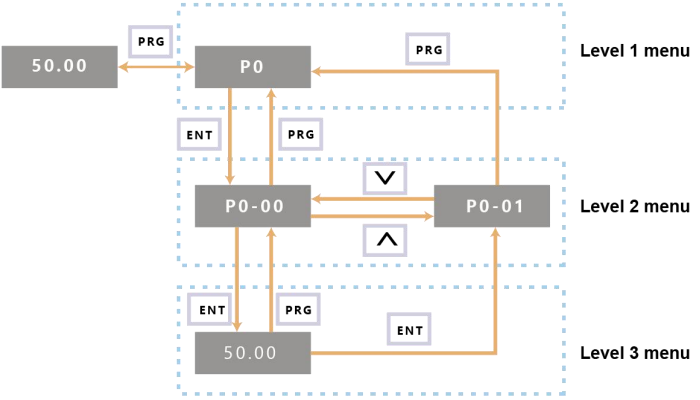

Picture 6-2 3 level menu operation process

Note: During three-level menu operation, press the PRG/ENTER key to return to the secondary (Level 2) menu.

Difference between key “ENTER” and “PRG”：

ENTER Key:

Action: Saves the current parameter setting and returns to Level 2 menu and automatically advances to the next function code.

PRG (Program) Key:

Action: Discards unsaved changes and returns to Level 2 menu without changing the active function code

eg：change function code P3-02 from 10.00Hz to 15.00Hz。Note: The bold text indicates the currently flashing digit (adjustable position). Refer below picture 6-3

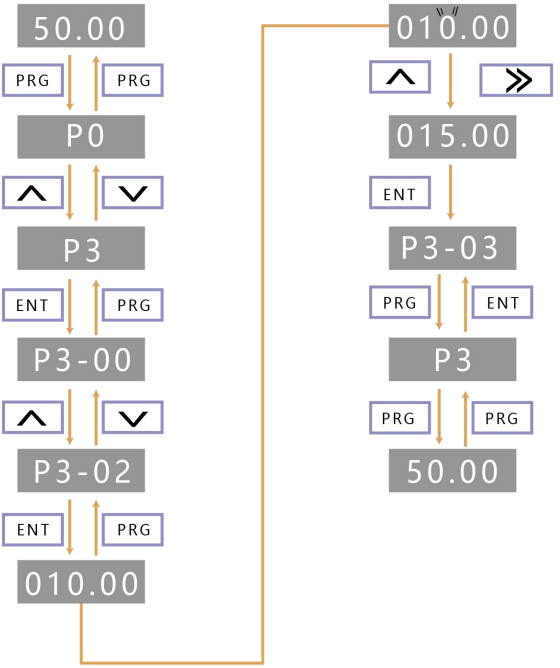

Picture 6-3

In third-level menu status, if the parameter has no flashing digit, it indicates the function code cannot be modified. Possible causes include:

1).The function code is a read-only parameter (e.g.,real-time monitoring parameters, operation log records).

2).The function code cannot be modified during operation – drive must be in stop mode for adjustment.

6.3 Organization of Drive Function Codes

The function code groups of the drive are as follows:：

Function code group	Function description	Explanation
P0-PP	General drive function codes	All functions are modified through these codes
H0~HC	Enhanced function code group	Multi-motor parameters, AI/AO characteristic calibration, optimized control, PLC card and other expansion module function settings
U0~U3	Operating status parameter group	Operating status parameters

In the function code browsing state, press the UP or DOWN key to select the desired function code group number, as shown in Picture 6-4:

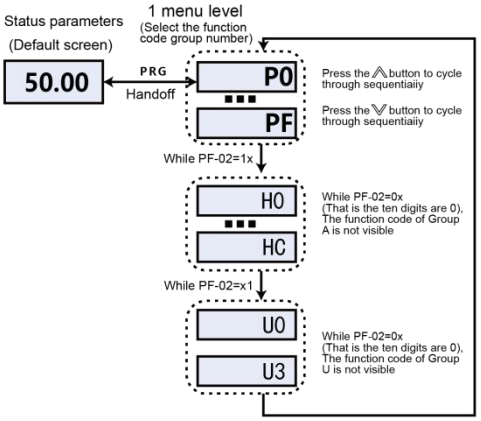

Picture 6-4

Function Code Group Browsing Operation

Control of whether H-group and U-group function codes are displayed by function code PP-02:

PP-02	Factory Default value：11		
	Setting value	Tens digit	Units digit
	function	H-group display selection	U-group display selection
	Setting range	0: Not displayed; 1: Displayed	0: Not displayed; 1: Displayed

6.4 Viewing Status Parameters

In either stopped or running state, various status parameters can be displayed separately by us ing the shift key "SHIFT" on the drive panel. Whether to display each parameter is selected by the bi nary bits of function codes P7-03 (Running Parameter 1), P7-04 (Running Parameter 2), and P7-05 (Stopped Parameter).

In stopped state, there are sixteen stoppage status parameters that can be selected for display, which are:

P7-05	LED Stop Display Parameters	Bit00: Set Frequency (Hz) Bit01: Bus Voltage (V) Bit02: DI Input Status Bit03: DO Output Status Bit04: AI1 Voltage (V) Bit05: AI2 Voltage (V) Bit06: AI3 Voltage (V)	Bit07: Counter Value Bit08: Length Value Bit09: PLC Stage Bit10: Load Speed Bit11: PID Setpoint Bit12: PULSE Input Frequency	33	☆

Switch the keyboard sequence to select displayed parameters

During operation, five running status parameters are displayed by default: Running frequency、 Set frequency、 Bus voltage、 Output voltage、 Output current,The display of other parameters is determined by function codes P7-03 and P7-04:

P7-03	LED operation display parameter1	Bit00: Operating Frequency 1 (Hz) Bit01: Set Frequency (Hz) Bit02: Bus Voltage (V) Bit03: Output Voltage (V) Bit04: Output Current (A) Bit05: Output Power (kW) Bit06: Output Torque (%) Bit07: DI Input Status	Bit08: DO Output Status Bit09: AI1 Voltage (V) Bit10: AI2 Voltage (V) Bit11: AI3 Voltage (V) Bit12: Counter Value Bit13: Length Value Bit14: Load Speed Display Bit15: PID Setpoint	1F	☆
P7-04	LED operation display parameter2	Bit00: PID Feedback Bit01: PLC Stage Bit02: PULSE Input Frequency (Hz) Bit03: Operating Frequency 2 (Hz) Bit04: Remaining Run Time Bit05: AI1 Raw Voltage (V) Bit06: AI2 Raw Voltage (V) Bit07: AI3 Raw Voltage (V)	Bit08: Rotational Speed (RPM) Bit09: Current Power-on Time (h) Bit10: Current Operating Time (h) Bit11: PULSE Input Frequency (Hz) Bit12: Communication Setpoint Bit13: Encoder Feedback Speed (RPM) Bit14: Master Frequency X Display (Hz) Bit15: Auxiliary Frequency Y Display (Hz)	0	☆

After a power outage and subsequent reboot, the drive automatically displays the same parameter set that was active before shutdown. Cycle through parameters sequentially using the keypad. The parameter value setting method as below:

For example: User-defined switching defined parameters are: Operating Frequency /Bus Voltage/Output Voltage/Output Current/Output Power/Output Torque/PID Feedback/Encoder Feedback Speed，then set the binary register data as the displayed data：

P7-03 as 0000 0000 0111 1101B

P7-04 as 0010 0000 0000 0001B

Change to Hex code as below：

P7-03 as 007DH

P7-04 as 2001H

The keyboard setting value displayed as P7-03：H.1043，P7-04：H.2001

P7-17	2nd row LED display parameter	0：operating frequency 1(Hz) 1：setting frequency(Hz) 2：DC Bus voltage (V) 3：Output valtage(V）	4：output capacity(A) 5：Input power (kW) 6：Output Torque(%)	0	☆

The setpoint value can be modified via P7-17 in both drive stop and run states to enable auxiliary parameter monitoring.

6.5 Start/Stop Control of the Drive

6.5.1 Start/Stop Signal Source Selection

The drive's start/stop control commands have three sources: panel control, terminal control, and communication control, selected via function parameter P0-02.

	Control source selection		Factory default value：0	Explanation
P0-02	Setting range	0	Operation panel control channel (LED off)	Press RUN/STOP keys for operation
		1	Terminal control channel (LED on)	Configure terminals as start/stop
		2	Communication control channel (LED flashing)	MODBUS-RTU protocol

6.5.1.1 Panel Start/Stop Control

Set parameter P0-02=0 to enable panel control mode.Start: Press RUN key (RUN indicator lights);Stop: Press STOP key during operation (RUN indicator turns off).

6.5.1.2 Terminal Start/Stop Control

For applications using toggle switches, electromagnetic buttons, or dry contact signals: Configuration:Switch signal mode: P4-11;Terminal assignment: P4-00~P4-09

Example 1-Toggle Switch Control Terminal Function Action DI2 Forward run SW1 closed: Run / Open: Stop DI4 Reverse run SW2 closed: Reverse / Open: Stop;Note: Simultaneous SW1+SW2 closure triggers stop, the setting method as blow picture 6-8 showed

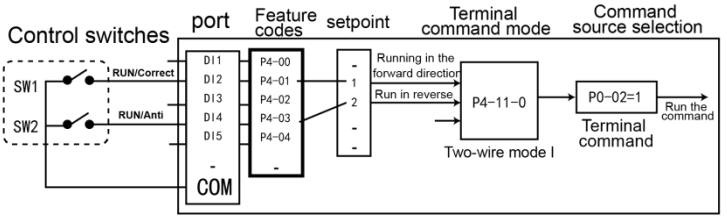

picture6-8 Terminal stop/run control

Example 2-Momentary Button Control

Terminal Function Trigger Condition

DI2 Start SB1 must remain closed

DI3 Stop Edge-triggered on contact

DI4 Reverse Edge-triggered on contact

State depends on last triggered button action

Figures Maintained:

Fig.6-8: Toggle switch wiring example

Fig.6-9: Momentary button wiring example

(Strictly preserves all technical parameters, terminal functions, and operational logic without added explanations)

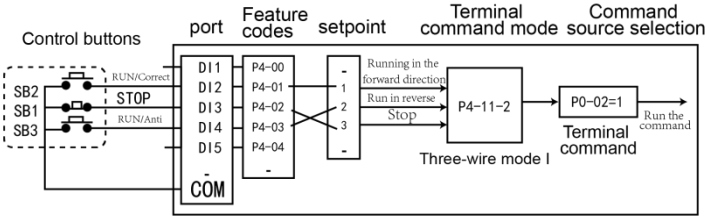

Picture 6-9 terminal start/stop control method

6.5.1.3 Communication Start/Stop Control

The use of host computers to control drive operation via communication (e.g., RS485 networks) is becoming increasingly common. To enable this:Insert the appropriate communication interface card into the drive's multi-function expansion port Set command source selection to communication mode (P0-02=2)l

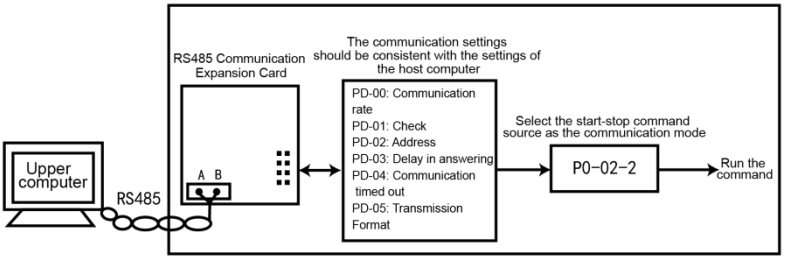

Picture 6-10 communication start/stop control method

Key Parameters (Fig.6-10):

Communication timeout (Pd-04): Set to non-zero value to enable automatic stop on communication failure

Protocol:

Built-in MODBUS-RTU slave protocol (host must use MODBUS-RTU master protocol) Refer to appendix for RS485 communication card specifications

6.6.2 Starting Modes

Three modes selectable via P6-00: Direct Start (P6-00=0) For low-inertia loads Features:Pre-start DC braking (suitable for elevators/hoists) Starting frequency (for high torque impact applications like cement mixers) Frequency curve shown in picture.6-11

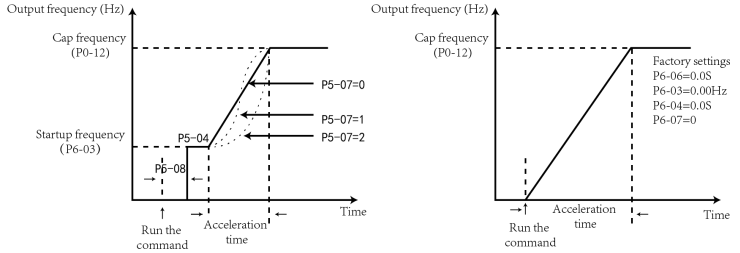

Picture 6-11 direct start method

Speed Tracking Restart (P6-00=1)For high-inertia mechanical loads Prevents over current by synchronizing with rotating loadFrequency curve shown in Fig.6-12

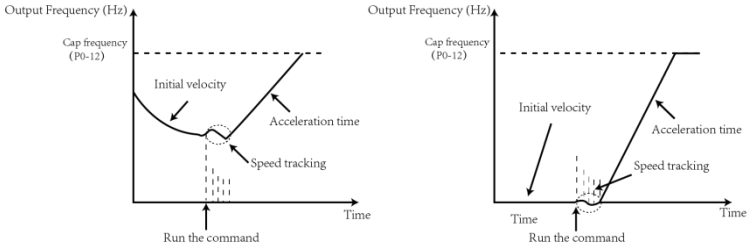

Picture 6-12 speed tracking restart method

Pre-Excitation Start (P6-00=2)For induction motors only Improves response speed for short acceleration requirements Frequency curve provided

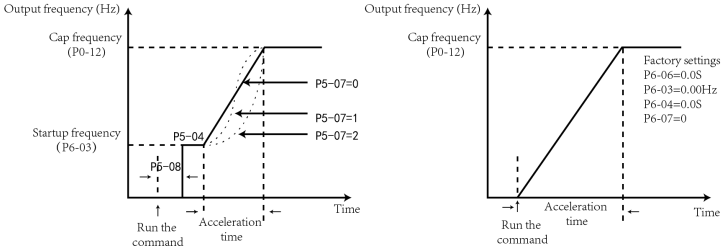

6.6.3 Stopping Modes

The drive offers two stopping modes, selectable via parameter P6-10:Ramp Stop (Controlled deceleration) Coast Stop (Free-run stopping)

6.5.4 Timed Stop Function

Enable via P8-42Timer settings:P8-43: Primary time setting P8-44: Secondary time setting

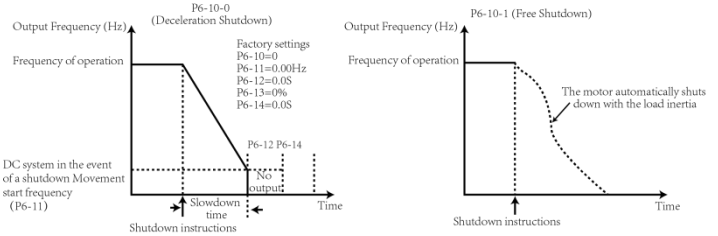

Picture 6-14 timed stop function

Supports analog input (e.g., potentiometer) for time adjustment (see P8-43 details)Reference: Fig.6-14 Timing Diagram

6.5.5 Jog Operation

For temporary low-speed operation during testing/debugging:Standard jog mode shown in Fig.6-15

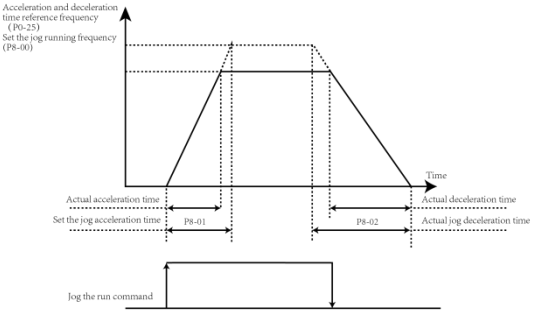

Picture 6-15 jog operation

6.5.5.2 Digital Input Jog Configuration

For frequent jog applications (e.g., textile machines):Configure DI terminals per picture.6-16 settings ;Operation: Press/hold JOG button Low-speed forward run; Release Ramp stop; Reverse jog also available

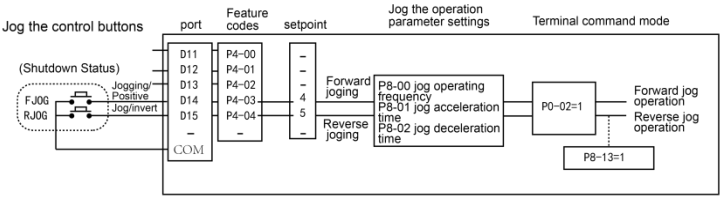

Picture 6-16 communication S terminal jog configuration

After setting the relevant function code parameters as shown in the above pictures, while the drive is in the stopped state, pressing the JOG button will start the drive running at a low speed in the forward direction. Releasing the JOG button will cause the drive to decelerate and stop. Similarly, pressing the JOG button can perform reverse jog operation.

6.5.6 Motor parameters to be set

When the drive operates in the "vector control" (P0-01=0 or 1) mode, it is highly dependent on the accurate motor parameters, which is one of the important differences from the "V/F control" (P0-01=2) mode, in order to make the drive have a good driving performance and operating efficiency, the drive must obtain the accurate parameters of the controlled motor. performance and operating efficiency, the driver must obtain the exact parameters of the controlled motor.

The required motor parameters are (function codes for default motor 1)

Motor 1 parameters	Parameter Description	clarification

P1-00	Motor type	Asynchronous, Variable Frequency Asynchronous,Synchronous
P1-01~P1-05	Motor rated power/ voltage/current/frequency/speed	Model parameters, manual entry
P1-06~P1-20	Motor internal equivalents tator resistance, inductive reactance, rotational In ductor-s, etc .	tuning parameter
P1-27~P1-34	Encoder parameters required for vector mode with sensor To set up	Encoder parameters

6.5.7 Motor Parameter Auto-Tuning and Identification

The drive acquires motor electrical parameters through methods as Dynamic Identification, Static Identification, Manual Parameter Entry etc..

Method	Application scope	effectiveness
No-load Dynamic ID	For synchronous & induction motors. When motor can be easily disconnected from system.	optimal
Loaded Dynamic ID	For synchronous & induction motors. When motor cannot be easily disconnected from system.	acceptable
Static ID	For synchronous & induction motors. When motor cannot be disconnected and dynamic ID is prohibited.	poor
Manual entry	For induction motors only. When motor cannot be disconnected. Copy previously identified parameters of same motor type to P1-00~P1-10.	Acceptable

The steps for automatic tuning of motor parameters are as follows

The following is an example of how to recognize the parameters of the default motor 1. The recognition method of motor 2 is the same, except that the function code number has to be changed accordingly.

Step1: If the motor can be completely disengaged from the load, in the case of power failure, mechanically disengage the motor from the load partially, so that the motor can rotate freely with no load.

Step2: After power on, first select the drive command source (P0-02) as the operation panel command channel.

Step3: Enter the nameplate parameters of the motor accurately (e.g. P1-00~P1-05), please enter the following parameters according to the actual parameters of the motor (selected according to the current motor):

Motor Selection	parameters
Motor 1	P1-00: Motor type selection P1-01: Motor power rating P1-02: Rated motor voltage P1-03: Rated motor current P1-04: Rated motor frequency P1-05: Rated motor speed
Motor 2	H2-00~H2-05: Same definition as above

Step 4: If it is an asynchronous motor, then P1-37 (tuning selection, for motor 2, it corresponds to H2 -37 function code) Please select 2 (asynchronous machine complete tuning), press ENTER to confirm, at this time, the keypad displays TUNE, as shown in the below picture:

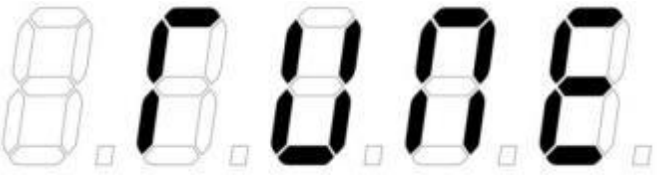

Picture 6-18

Then press the RUN key on the keypad. The drive will accelerate/decelerate and run the motor in both forward and reverse directions, with the operation indicator lit. The identification process lasts approximately 2 minutes. When the display message disappears and returns to normal parameter display status, it indicates the tuning is complete. After full tuning, the drive will automatically calculate the following motor parameters:

Motor selection	parameters
Motor 1	P1-06：Asynchronous motor Stator resistance P1-07：Asynchronous motor Rotor resistance P1-08：Asynchronous motor Leakage reactance P1-09：Asynchronous motor Mutual inductance P1-10：Asynchronous motor No-load current P1-16： Synchronous motor Stator resistance P1-17： Synchronous motor D-axis inductance P1-18： Synchronous motor Q-axis inductance P1-20： Synchronous motor Back EMF
Motor 2	H2-06~H2-10： same as above definition

If the motor cannot be completely disconnected from the load,select 1 (asynchronous stationary tuning)or 11(synchronous motor stationary tuning) for P1-37 (H2-37 for motor 2) and press the RUN key on the keypad panel to start the motor parameter identification operation .

6.6 Usage of Inverter DI Port

The control board comes with 5 DI ports, numbered DI1~DI5. The DI port is equipped with a 24Vdc sensing power supply on the internal hardware, and users only need to connect the DI port to the COM port to input the DI signal to the frequency converter.

In the factory value state, P4-38=00000, the signal is valid (logic 1) when the DI port is shorted; When the DI port is dangling, the DI is an invalid (logic 0) signal; Users can also change the active mode of the DI port, that is, the signal is invalid (logic 0) when the DI port is shorted; When the DI port is suspended, the DI is a valid (logic 1) signal, and the corresponding bit of P4-38 needs to be modified to 1, and the two function codes correspond to the effective mode setting of DI1~DI5 respectively.The inverter's input signal to the DI port is also set with a software filter time (P4-10) to improve the level of immunity to interference. For DI1~DI3 input ports, the port signal delay function is also provided to facilitate some applications that require delay processing:

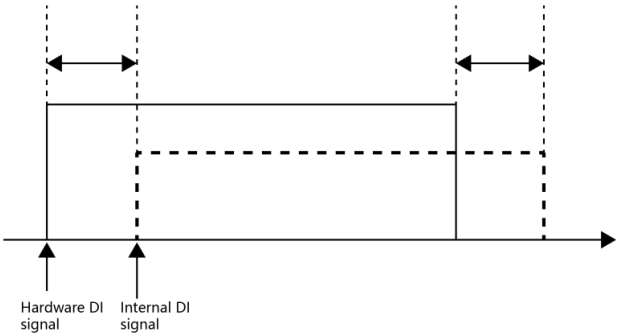

Picture 6-19 DI delay set

The functions of the aforementioned 5 DI ports can be defined through parameters P4-00 to P4-04, where each DI can be assigned any of 53 available functions according to requirements. Please refer to the detailed descriptions of parameters P4-00 to P4-04 for specific information.

Regarding hardware characteristics, only the HDI port is designed to accept high-frequency pulse signals. For applications requiring high-speed pulse counting, please select the appropriate product model.

6.7 Usage of Inverter DO Ports

The control board comes with 2 built-in digital outputs: the relay output TA1-TB1-TC1 and the transistor output Y1. Among them, Y1 is a transistor-type output capable of driving 24V DC low-

voltage signal circuits, while the relay output can drive 50V AC control circuits. If additional digital outputs are required, they can be expanded using an optional external I/O extension module.

By configuring the values of function parameters P5-00 to P5-02, users can define the functions of each digital output. These outputs can be used to indicate various operating states and alarms of the inverter, with approximately 45 configurable functions available to meet specific automation control requirements. For detailed parameter settings, please refer to the functional code descriptions in Parameter Group P5.

6.8 AI Input Signal Characteristics and Preprocessing

The inverter supports 2 channels of AI resources

Port	Input signal Characteristics
AI1-GND	Accepts 0~10V DC signals
AI2-GND	- If the DIP switch "AI2 I-V" is set to "V", it accepts 0~10V DC signals. - If set to "I", it accepts 0~20mA current signals

AI inputs can be used for: Frequency reference input (external voltage/current as speed command), Torque reference input, Voltage reference input during V/F separation, PID setpoint or feedback input.

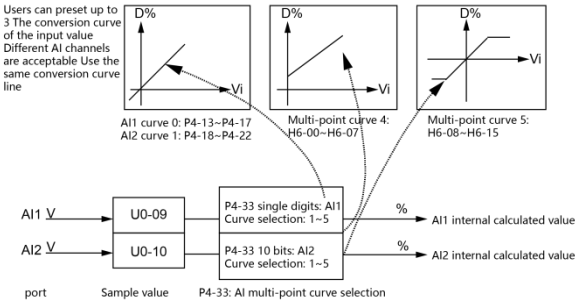

Picture 6-20 AI signal vs. setpoint

The sampled values from AI ports can be read via function codes U1-08 and U1-09, but the converted values are used internally and not directly accessible to users.

6.9. Usage of Inverter AO Ports

The inverter comes with 1 default AO output (AO1-GND)，2 AO output via expansion cards.

Port	Input signal characteristic
AO1-GND	AO1 I-V set “V ”, output 0~10Vdc signal
	AO1 I-U ”set “I ”output 0~20mA signal
AO2-GND	Via expansion card

AO1 & AO2 Provide analog output (e.g., 0-10V, 4-20mA) to monitor internal operating parameters. The Parameter Configure via P5-07 (AO1 output parameter) and P5-08 (AO2 output parameter).

The output calibration is adjustable using P5-10 to P5-13 (see Chapter 7 for details).

Correction curve example (linear adjustment) refer below picture。

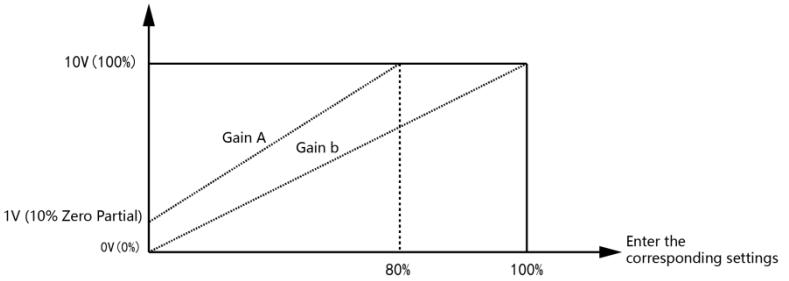

Picture 6-21 AO output

Chapter 7: Drive Debugging Procedure

7.1 Basic debugging procedure

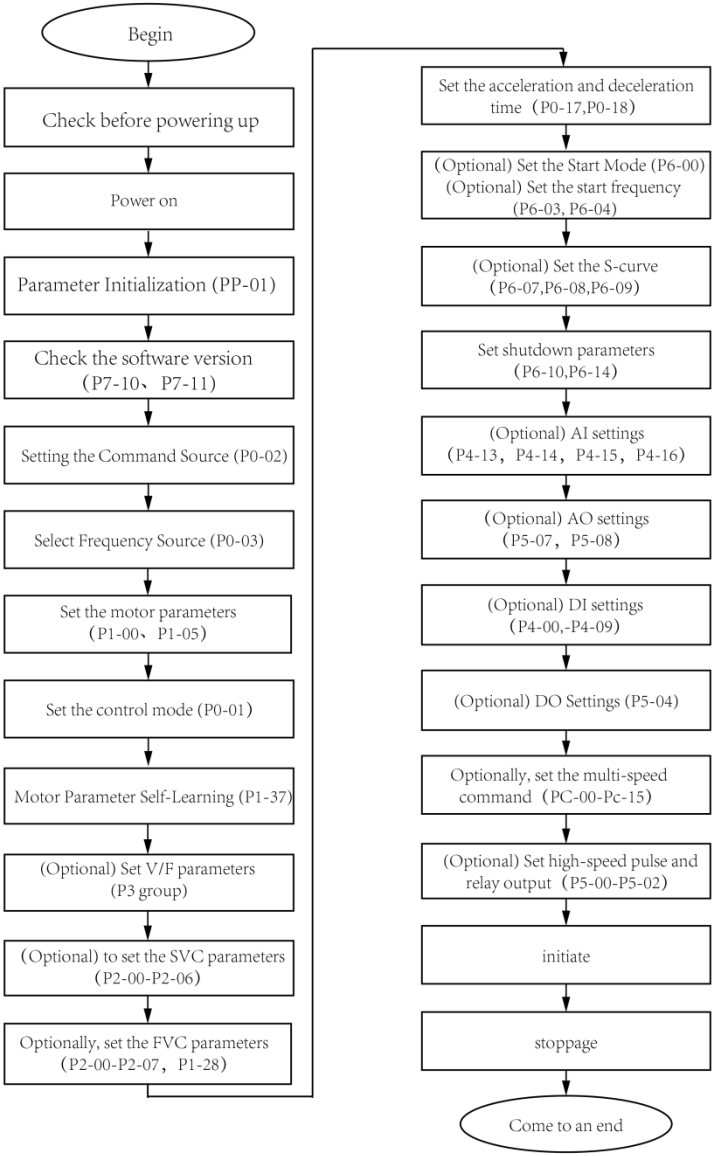

Picture 7-1 Basic debugging procedure

7.2 V/F debugging procesure

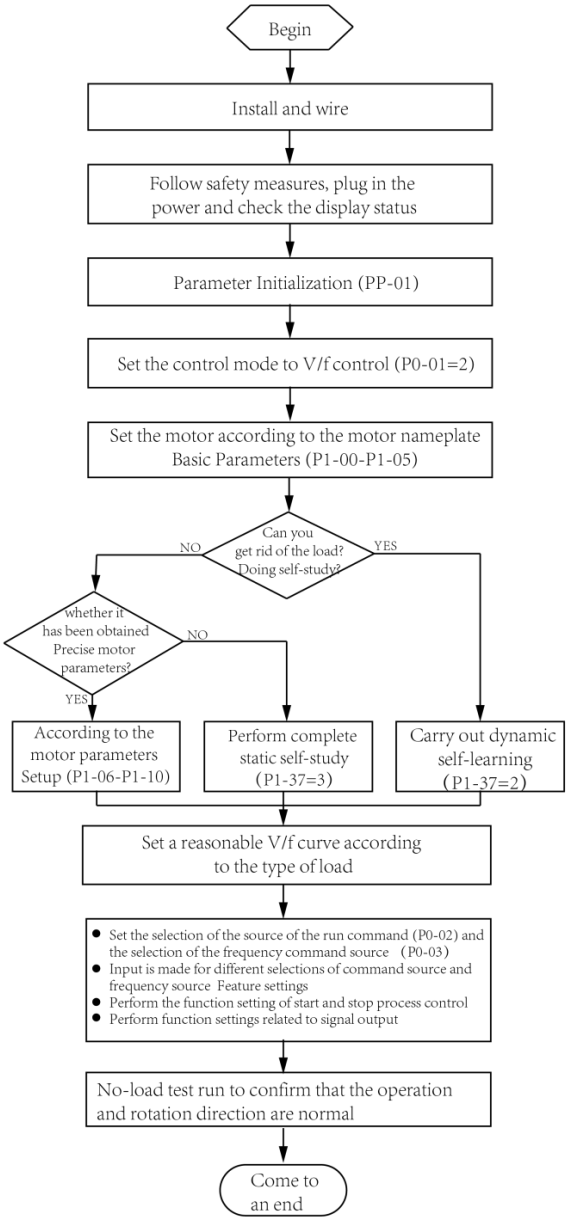

Picture 7-2 V/F debugging procedure

7.3 FVC&SVC debugging procedure

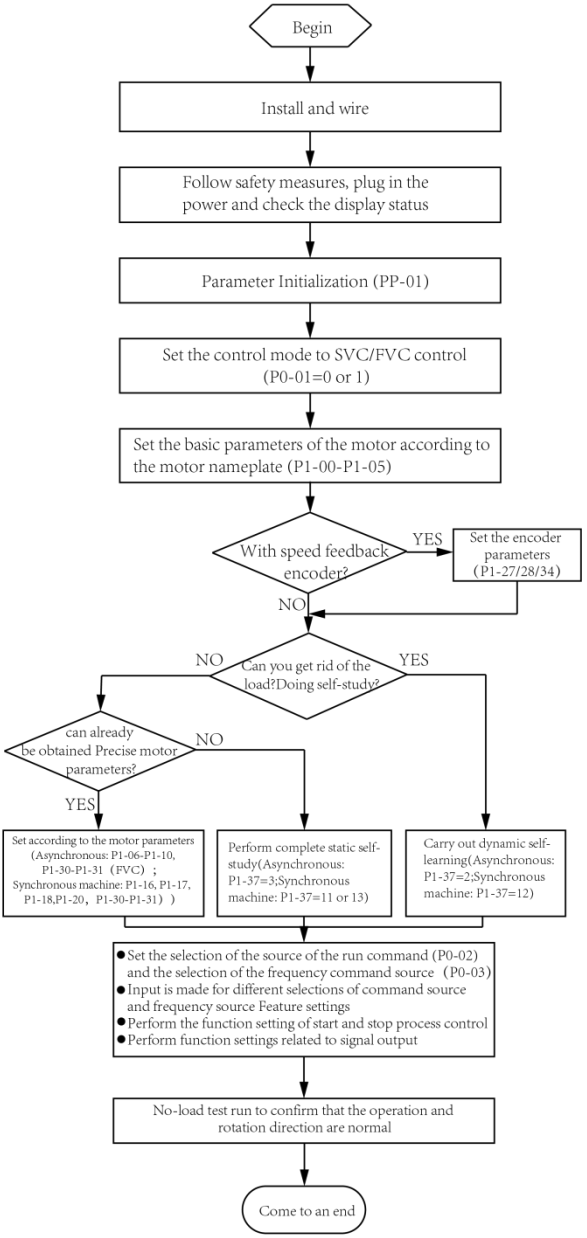

Picture 7-3 FVC&SVC debugging procedure

Chapter 8 Function parameter sheet

PP-00 should be set to a non-zero value to enable parameter protection password. In both function parameter mode and user parameter modification mode, the parameter menu can only be accessed after entering the correct password. To disable the password, set PP-00 to 0. The parameter menu in user-customized parameter mode is not protected by password. Group P and Group H are basic function parameters, while Group U are monitoring function parameters. The symbols in the function table are explained as follows:

"☆": Indicates that the parameter value can be modified while the drive is in either stopped or running state.

"★": Indicates that the parameter value cannot be modified while the drive is running.

"●": Indicates that the parameter value is an actual detected/recorded value and cannot be modified.

"*": Indicates that the parameter is a "factory parameter" for manufacturer use only, and users are prohibited from operating it.

"(E)": Indicates parameters related to synchronous motor control.

8.1 Basic function parameter sheet

Function Code	Name	Options	Default	Edit Rule	Protocol
P0 Basic Function Group					
P0-00	Inverter Type	1: G model (constant torque load model) 2: P model (fan and pump load model)	Model-dep	●	0xF000
P0-01	Motor 1 Control Mode	0: Sensorless Vector Control (SVC) 1: Closed-Loop Vector Control (FVC) 2: V/F Control	Model-dep	★	0xF001
P0-02	Command Source	0: Keypad (LED off) 1: Terminal (LED on) 2: Communication (LED blink)	0	☆	0xF002
P0-03	Main Frequency Source (X)	0: Digital Preset (set by P0-08, UP and DOWN to adjust, non-volatile) 1: Digital Preset (set by P0-08, UP and DOWN to adjust, volatile) 2: AI1 3: AI2 4: AI3 5: High-Speed Pulse (DI5) 6: (Reserved) 7: Simple PLC 8: PID 9: Communication 10: Optic Multi-Speed	1	★	0xF003

Function Code	Name	Options	Default	Edit Rule	Protocol
P0-04	Aux Frequency Source (Y)	Same as P0-03	0	★	0xF004
P0-05	Aux Frequency Range	0: Relative to Max Frequency 1: Relative to Source X	0	☆	0xF005
P0-06	Aux Frequency Range (Y)	0.0%~300.0%	1	☆	0xF006
P0-07	Frequency Source Combination	Bit 0: Frequency Source Selection 0: Main X 1: X+Y Calculation 2: X/Y Switch 3: X/Calc Switch 4: Y/Calc Switch Bit 10: Operational Relationship between Frequency Source X and Y 0: X+Y 1: X-Y 2: Max(X,Y) 3: Min(X,Y)	0	☆	0xF007
P0-08	Preset Frequency	0.00Hz~Max Freq (P0-10)	50.00Hz	☆	0xF008
P0-09	Rotation Direction	0: Forward 1: Reverse	0	☆	0xF009
P0-10	Maximum Frequency	50.00Hz~500.0Hz	50.00Hz	★	0xF00A
P0-11	Upper Limit Source	0: P0-12 1: AI1 2: AI2 3: AI3 4: PULSE 5: Communication	0	★	0xF00B
P0-12	Upper Limit Frequency	Lower Limit (P0-14)~Max Freq (P0-10)	50.00Hz	☆	0xF00C
P0-13	Upper Limit Offset	0.00Hz~Max Freq (P0-10)	0.00Hz	☆	0xF00D
P0-14	Lower Limit Frequency	0.00Hz~Upper Limit (P0-12)	0.00Hz	☆	0xF00E
P0-15	Carrier Frequency	0.5kHz~16.0kHz	Model-dep	☆	0xF00F
P0-16	Carrier Temp. Adjustment	0: Disable 1: Enable	1	☆	0xF010
P0-17	Acceleration Time 1	0.00s~650.00s (P0-19=2) 0.0s~6500.0s (P0-19=1) 0s~6500s (P0-19=0)	Model-dep	☆	0xF011

Function Code	Name	Options	Default	Edit Rule	Protocol
P0-18	Deceleration Time 1	0.00s~65000s	Model-dep	☆	0xF012
P0-19	Accel/Decel Time Unit	0: 1s 1: 0.1s 2: 0.01s	1	★	0xF013
P0-21	Aux Frequency Offset	0.00Hz~Max Freq (P0-10)	0.00Hz	☆	0xF015
P0-22	Frequency Command Resolution	1: 0.1Hz 2: 0.01Hz	2	★	0xF016
P0-23	Digital Freq. Memory	0: Don't Remember 1: Remember	1	☆	0xF017
P0-23	Digital Freq. Memory	0: Don't Remember 1: Remember	1	☆	0xF017
P0-24	Motor Selection	0: Motor 1; 1: Motor 2	0	★	0xF018
P0-25	Accel/Decel Time Base Frequency	0: Maximum Frequency (P0-10) 1: Set Frequency 2: 100Hz	0	★	0xF019
P0-26	Reference for UP/DOWN During Operation	0: Running Frequency 1: Set Frequency	0	★	0xF01A
P0-27	Command Source Binding Frequency Source	Bit 0: Operation Panel Command Binding Frequency Source Selection 0: No Binding 1: Digital Set Frequency 2: AI1 3: AI2 4: AI3 5: PULSE Pulse Setting (DI5) 6: Multi-Speed 7: Simple PLC 8: PID 9: Communication Given Bit 10: Terminal Command Binding Frequency Source Selection Bit 100: Communication Command Binding Frequency Source Selection Bit 1000: Auto Run Binding Frequency Source Selection	0	☆	0xF01B
P0-28	Communication Expansion Card Type	0: Modbus Communication Card 1: Network Bridge Communication	0	☆	0xF01C
P1 Group First Motor Parameters					
P1-00	Motor Type Selection	0: Standard Asynchronous Motor 1: Variable Frequency Asynchronous Motor 2: Permanent Magnet Synchronous Motor	Model-dep	★	0xF100
P1-01	Motor Rated Power	0.1kW~1000.0kW	Model-dep	★	0xF101

Function Code	Name	Options	Default	Edit Rule	Protocol
P1-02	Motor Rated Voltage	1V~2000V	Model-dep	★	0xF102
P1-03	Motor Rated Current	0.01A~655.35A (Inverter Power<=55kW) 0.1A~6553.5A (Inverter Power >55kW)	Model-dep	★	0xF103
P1-04	Motor Rated Frequency	0.01Hz~Maximum Frequency	Model-dep	★	0xF104
P1-05	Motor Rated Speed	1rpm~6535rpm	Model-dep	★	0xF105
P1-06	Asynchronous Motor Stator Resistance	0.001Ω~65.535Ω (Inverter Power<=55kW) 0.0001Ω~6.5535Ω (Inverter Power>55kW)	Tuning Param	★	0xF106
P1-07	Asynchronous Motor Rotor Resistance	0.001Ω~65.535Ω (Inverter Power<=55kW) 0.0001Ω~6.5535Ω (Inverter Power>55kW)	Tuning Param	★	0xF107
P1-08	Asynchronous Motor Leakage Inductance	0.01mH~655.35mH(Inverter Power<=55kW) 0.001mH~65.535mH(Inverter Power>55kW)	Tuning Param	★	0xF108
P1-09	Asynchronous Motor Mutual Inductance	0.1mH~6553.5mH (Inverter Power <=55kW) 0.01mH~655.35mH (Inverter Power >55kW)	Tuning Param	★	0xF109
P1-10	Asynchronous Motor No-Load Current	0.01A~P1-03 (Inverter Power <=55kW) 0.1A~P1-03 (Inverter Power >55kW)	Tuning Param	★	0xF10A
P1-16	Synchronous Motor Stator Resistance	0.001Ω~65.535Ω (Drive Power <=55kW) 0.0001Ω~6.5535Ω (Drive Power >55kW)	Tuning Param	★ (E)	0xF110
P1-17	Synchronous Motor D-Axis Inductance	0.01mH~655.35mH (Drive Power <=55kW) 0.001mH~65.535mH (Drive Power >55kW)	Tuning Param	★ (E)	0xF111
P1-18	Synchronous Motor Q-Axis Inductance	0.01mH~655.35mH (Drive Power <=55kW) 0.001mH~65.535mH (Drive Power >55kW)	Tuning Param	★ (E)	0xF112
P1-20	Synchronous Motor Back EMF	0.1V~6553.5V	Tuning Param	★ (E)	0xF114
P1-22	Synchronous Motor No-Load Current	0%~180%	0.05	★ (E)	0xF116
P1-27	Encoder Pulse Count	1~65535	1024	★	0xF11B
P1-28	Encoder Type	0: ABZ Incremental Encoder 1: UVW Incremental Encoder 2: Resolver 3: Sine-Cosine Encoder 4: Wire-Saving UVW Encoder	0	★	0xF11C
P1-30	ABZ Incremental Encoder AB Phase	0: Forward 1: Reverse	0	★	0xF11E

Function Code	Name	Options	Default	Edit Rule	Protocol
	Sequence				
P1-31	Encoder Installation Angle	0.0~359.9°	0.0°	★	0xF11F
P1-32	UVW Encoder UVW Phase Sequence	0: Forward 1: Reverse	0	★	0xF120
P1-33	UVW Encoder Offset Angle	0.0~359.9°	0.0°	★	0xF121
P1-34	Resolver Pole Pairs	1~65535	1	★	0xF122
P1-36	Speed Feedback PG Disconnection Detection Time	0.0s: No Action 0.1s~10.0s	0	★	0xF124
P1-37	Tuning Selection	0: No Operation 1: Asynchronous Motor Static Tuning 2: Asynchronous Motor Complete Tuning 3: Asynchronous Motor Static Complete Tuning 11: Synchronous Motor Static Self-Learning (E) 12: Synchronous Motor No-Load Dynamic Self-Learning (E)	0	★	0xF125
P2 Group First Motor Vector Control Parameters					
P2-00	Speed Loop Proportional Gain 1	1~100	30(E):20	☆	0xF200
P2-01	Speed Loop Integral Time 1	0.01s~10.00s	0.50s	☆	0xF201
P2-02	Switching Frequency 1	0.00~P2-05	5.00Hz	☆	0xF202
P2-03	Speed Loop Proportional Gain 2	1~100	20(E):10	☆	0xF203
P2-04	Speed Loop Integral Time 2	0.01s~10.00s	1.00s	☆	0xF204
P2-05	Switching Frequency 2	P2-02~Maximum Frequency	10.00Hz	☆	0xF205
P2-06	Vector Control Slip Gain	50%~200%	1	☆	0xF206
P2-07	Speed Loop Filter Time Constant	0.000s~1.00s	0.015s	☆	0xF207
P2-09	Torque Upper Limit	0: Parameter P2-10 Setting 1: AI1	0	☆	0xF209

Function Code	Name	Options	Default	Edit Rule	Protocol
	Command Selection in Speed Control Mode	2: AI2 3: AI3 4: Pulse (DI5) 5: Communication Given 6: MIN(AI1,AI2) 7: MAX(AI1,AI2) Full scale of options 1-7 corresponds to P2-10			
P2-10	Torque Upper Limit Digital Setting in Speed Control Mode	0.0%~200.0%	1.5	☆	0xF20A
P2-11	Torque Upper Limit Command Selection in Speed Control Mode (Generation)	0: Parameter P2-12 Setting 1: AI1 2: AI2 3: AI3 4: PULSE Pulse Setting 5: Communication Given 6: MIN(AI1,AI2) 7: MAX(AI1,AI2) 8: Parameter P2-12 Setting Full scale of options 1-7 corresponds to P2-12	0	☆	0xF20B
P2-12	Torque Upper Limit Digital Setting in Speed Control Mode (Generation)	0.0%~200.0%	1.5	☆	0xF20C
P2-13	Excitation Regulation Proportional Gain	0~60000	2000	☆	0xF20D
P2-14	Excitation Regulation Integral Gain	0~60000	1300	☆	0xF20E
P2-15	Torque Regulation Proportional Gain	0~60000	2000	☆	0xF20F
P2-16	Torque Regulation Integral Gain	0~60000	1300	☆	0xF210
P2-17	Speed Loop Integral Property	0: Valid 1: Invalid	0	☆	0xF211
P2-18	Synchronous Motor Flux-Weakening Mode	0~2	1	★(E)	0xF212

Function Code	Name	Options	Default	Edit Rule	Protocol
P2-19	Synchronous Motor Flux-Weakening Coefficient	1~50	5	☆(E)	0xF213
P2-20	Overmodulation Voltage Coefficient	100%~110%	1.05	☆	0xF214
P2-21	Constant Power Zone Torque Coefficient	50%~200%	1	☆	0xF215
P2-23	Synchronous Motor Output Voltage Saturation Margin	0~50%	0.05	☆ (E)	0xF217
P2-24	Initial Position Detection Current	10%~180%	0.8	☆ (E)	0xF218
P2-25	Initial Position Detection Enable	0~3	1	☆(E)	0xF219
P2-26	Speed Loop Mode Selection	0~1	0	☆ (E)	0xF21A
P2-27	Synchronous Motor Saliency Adjustment Gain	50~500	100	☆ (E)	0xF21B
P2-28	Maximum Torque Current Ratio Control Enable	0~1	0	☆ (E)	0xF21C
P2-29	Feedforward Compensation Mode	0~2	0	☆ (E)	0xF21D
P2-30	Current Loop KP During Tuning	0~100	6	☆ (E)	0xF21E
P2-31	Current Loop KI During Tuning	0~100	6	☆ (E)	0xF21F
P2-32	Z Signal Correction Enable	0~1	1	☆ (E)	0xF220
P2-33	Synchronous Motor SVC Speed Filter Level	10~1000	100	☆ (E)	0xF221

Function Code	Name	Options	Default	Edit Rule	Protocol
P2-34	Synchronous Motor SVC Speed Estimation Proportional Gain	5~200	40	☆ (E)	0xF222
P2-35	Synchronous Motor SVC Speed Estimation Integral Gain	5~500	30	☆ (E)	0xF223
P2-36	Synchronous Motor SVC Initial Excitation Current	0~150%	0.3	☆ (E)	0xF224
P2-37	Synchronous Motor SVC Minimum Carrier Frequency	0.8~100.0	1.5	☆ (E)	0xF225
P2-38	Low Frequency Operation Mode	0~1	0	☆ (E)	0xF226
P2-39	Low Frequency Activation	0.00~10.00	2	☆ (E)	0xF227
P2-40	Low Frequency Step Size	0.0001~1.0000	0.001	☆ (E)	0xF228
P2-41	Low Frequency Braking Current	30~120	80	☆ (E)	0xF229
P2-42	Synchronous Motor SVC Speed Tracking	0~1	0	☆ (E)	0xF22A
P2-43	Zero Servo Enable	0~1	0	☆ (E)	0xF22B
P2-44	Switching Frequency	0.00~655.35	0.3	☆ (E)	0xF22C
P2-45	Zero Servo Speed Loop Proportional Gain	1~100	10	☆ (E)	0xF22D
P2-46	Zero Servo Speed Loop Integral Time	0.01~10.00	0.5	☆ (E)	0xF22E
P2-47	Stop Reverse Prohibition	0~1	0	☆ (E)	0xF22F

Function Code	Name	Options	Default	Edit Rule	Protocol
P2-48	Stop Angle	0.0~10.0	0.8	☆ (E)	0xF230
P2-49	Online Tuning Enable	0: Disable 1: Tune Before First Run After Power-On 2: Tune Before Running	0	☆ (E)	0xF231
P2-50	Online Back EMF Identification	0: Disable 1: Enable	0	☆ (E)	0xF232
P2-51	Initial Position Compensation Angle	0.0~359.9	0	☆(E)	0xF233
P3 Group V/F Control Parameters					
P3-00	V/F Curve Setting	0: Linear V/F 1: Multi-Point V/F 2: Square V/F 3: 1.2 Power V/F 4: 1.4 Power V/F 6: 1.6 Power V/F 8: 1.8 Power V/F 9: Reserved 10: V/F Full Separation Mode 11: V/F Half Separation Mode	0	★	0xF300
P3-01	Torque Boost	0.0%: (Automatic Torque Boost) 0.1%~30.0%	Model-dep	☆	0xF301
P3-02	Torque Boost Cutoff Frequency	0.00Hz~Maximum Frequency	50.00Hz	★	0xF302
P3-03	Multi-Point V/F Frequency Point 1	0.00Hz~P3-05	0.00Hz	★	0xF303
P3-04	Multi-Point V/F Voltage Point 1	0.0%~100.0%	0	★	0xF304
P3-05	Multi-Point V/F Frequency Point 2	P3-03~P3-07	0.00Hz	★	0xF305
P3-06	Multi-Point V/F Voltage Point 2	0.0%~100.0%	0	★	0xF306
P3-07	Multi-Point V/F Frequency Point 3	P3-05~Motor Rated Frequency (P1-04)	0.00Hz	★	0xF307
P3-08	Multi-Point V/F Voltage Point 3	0.0%~100.0%	0	★	0xF308
P3-09	V/F Slip Compensatio	0.0%~200.0%	0.8	☆	0xF309

Function Code	Name	Options	Default	Edit Rule	Protocol
	n Gain				
P3-10	V/F Overexcitation Gain	0~200	64	☆	0xF30A
P3-11	V/F Oscillation Suppression Gain	0~100	Model-dep	☆	0xF30B
P3-13	V/F Separation Voltage Source	0: Digital Setting (P3-14) 1: AI1 2: AI2 3: AI3 4: PULSE Pulse Setting (DI5) 5: Multi-Step Command 6: Simple PLC 7: PID 8: Communication Given Note: 100.0% corresponds to motor rated voltage	0	☆	0xF30D
P3-14	V/F Separation Voltage Digital Setting	0V~Motor Rated Voltage	0V	☆	0xF30E
P3-15	V/F Separation Voltage Rise Time	0.0s~1000.0s Note: Time from 0V to motor rated voltage	0.0s	☆	0xF30F
P3-16	V/F Separation Voltage Deceleration Time	0.0s~1000.0s Note: Time from 0V to motor rated voltage	0.0s	☆	0xF310
P3-17	V/F Separation Stop Mode	0: Frequency/Voltage Independently Reduced to 0 1: Frequency Reduced After Voltage Reaches 0	0	☆	0xF311
P3-18	Slip Compensation Time Constant	0.1s~10.00s	0.50s	☆	0xF312
P3-19	Online Torque Compensation Gain	80%~150%	1	☆	0xF313
P3-29	Automatic Frequency Increase Enable	0: Disable 1: Enable	0	★	0xF31D
P3-30	Minimum Motoring Torque Current	10~100	50	☆	0xF31E

Function Code	Name	Options	Default	Edit Rule	Protocol
P3-31	Maximum Generating Torque Current	10~100	20	☆	0xF31F
P3-32	Automatic Frequency Increase KP	0~100	50	☆	0xF320
P3-33	Automatic Frequency Increase KI	0~100	50	☆	0xF321
P4 Group Input Terminals					
P4-00	DI1 Terminal Function Selection	0: No Function 1: Forward Run (FWD) or Run Command 2: Reverse Run (REV) or Forward/Reverse Direction (Note: When set to 1 or 2, must be used with P4-11, see function code parameter description) 3: Three-Wire Run Control 4: Forward Jog (FJOG) 5: Reverse Jog (RJOG) 6: Terminal UP 7: Terminal DOWN 8: Free Stop 9: Fault Reset (RESET) 10: Run Pause 11: External Fault Normally Open Input 12: Multi-Step Command Terminal 1 13: Multi-Step Command Terminal 2 14: Multi-Step Command Terminal 3 15: Multi-Step Command Terminal 4 16: Accel/Decel Time Selection Terminal 1 17: Accel/Decel Time Selection Terminal 2 18: Frequency Source Switch 19: UP/DOWN Setting Clear (Terminal, Keypad) 20: Control Command Switch Terminal 1 21: Accel/Decel Prohibition 22: PID Pause 23: PLC State Reset 24: Swing Frequency Pause 25: Counter Input 26: Counter Reset 27: Length Count Input 28: Length Reset 29: Torque Control Prohibition 30: PULSE (Pulse) Frequency Input (Valid only for DI5) 31: Reserved 32: Immediate DC Braking 33: External Fault Normally Closed Input 34: Frequency Modification Enable	1	★	0xF400
P4-01	DI2 Terminal Function Selection		2	★	0xF401
P4-02	DI3 Terminal Function Selection		9	★	0xF402
P4-03	DI4 Terminal Function Selection		12	★	0xF403
P4-04	DI5 Terminal Function Selection		13	★	0xF404
P4-05	DI6 Terminal Function Selection		0	★	0xF405
P4-06	DI7 Terminal Function Selection		0	★	0xF406
P4-07	DI8 Terminal Function Selection		0	★	0xF407
P4-08	DI9 Terminal Function Selection		0	★	0xF408
P4-09	DI10 Terminal Function Selection		0	★	0xF409

Function Code	Name	Options	Default	Edit Rule	Protocol
		35: PID Action Direction Reversal 36: External Stop Terminal 1 37: Control Command Switch Terminal 2 38: PID Integral Pause 39: Frequency Source X and Preset Frequency Switch 40: Frequency Source Y and Preset Frequency Switch 41: Motor Selection Terminal 1 42: Motor Selection Terminal 2 43: PID Parameter Switch 44: User-Defined Fault 1 45: User-Defined Fault 2 46: Speed Control/Torque Control Switch 47: Emergency Stop 48: External Stop Terminal 2 49: Deceleration DC Braking 50: Clear Current Run Time 51: Two-Wire/Three-Wire Switch 52-59: Reserved			
P4-10	DI Digital Input Terminal Filter Time	0.000s~1.000s	0.010s	☆	0xF40A
P4-11	Terminal Command Mode	0: Two-Wire 1 1: Two-Wire 2 2: Three-Wire 1 3: Three-Wire 2	0	★	0xF40B
P4-12	Terminal UP/DOWN Change Rate	0.001Hz/s~65.535Hz/s	1.00Hz/s	☆	0xF40C
P4-13	Analog Input 1 Minimum Input	0.00V~P4-15	0.00V	☆	0xF40D
P4-14	Analog Input 1 Minimum Input Corresponding Setting	-100.0%~+100.0%	0	☆	0xF40E
P4-15	Analog Input 1 Maximum Input	P4-13~+10.00V	10.00V	☆	0xF40F
P4-16	Analog Input 1 Maximum Input Corresponding Setting	-100.0%~+100.0%	1	☆	0xF410
P4-17	AI1 Filter Time	0.00s~10.00s	0.10s	☆	0xF411
P4-18	Analog Input 2 Minimum Input	0.00V~P4-20	0.00V	☆	0xF412

Function Code	Name	Options	Default	Edit Rule	Protocol
P4-19	Analog Input 2 Minimum Input Corresponding Setting	-100.0%~+100.0%	0	☆	0xF413
P4-20	Analog Input 2 Maximum Input	P4-18~+10.00V	10.00V	☆	0xF414
P4-21	Analog Input 2 Maximum Input Corresponding Setting	-100.0%~+100.0%	1	☆	0xF415
P4-22	AI2 Filter Time	0.00s~10.00s	0.10s	☆	0xF416
P4-23	Analog Input 3 Minimum Input	-10.00V~P4-25	0.5V	☆	0xF417
P4-24	Analog Input 3 Minimum Input Corresponding Setting	-100.0%~+100.0%	0	☆	0xF418
P4-25	Analog Input 3 Maximum Input	P4-23~+10.00V	6.6V	☆	0xF419
P4-26	Analog Input 3 Maximum Input Corresponding Setting	-100.0%~+100.0%	1	☆	0xF41A
P4-27	AI3 Filter Time	0.00s~10.00s	0.50s	☆	0xF41B
P4-28	PULSE Minimum Input	0.00kHz~P4-30	0.00kHz	☆	0xF41C
P4-29	PULSE Minimum Input Corresponding Setting	-100.0%~100.0%	0	☆	0xF41D
P4-30	PULSE Maximum Input	P4-28~100.00kHz	50.00kHz	☆	0xF41E
P4-31	PULSE Maximum Input Setting	-100.0%~100.0%	1	☆	0xF41F
P4-32	PULSE Filter Time	0.00s~10.00s	0.002s	☆	0xF420

Function Code	Name	Options	Default	Edit Rule	Protocol
P4-33	Analog Input Curve Selection	Bit 0: AI1 Curve Selection 1: Curve 1 (2 points, see P4-13~P4-16) 2: Curve 2 (2 points, see P4-18~P4-21) 3: Curve 3 (2 points, see P4-23~P4-26) 4: Curve 4 (4 points, see H6-00~H6-07) 5: Curve 5 (4 points, see H6-08~H6-15) Bit 10: AI2 Curve Selection, as above Bit 100: AI3 Curve Selection, as above	321	☆	0xF421
P4-34	Analog Input Below Minimum Input Setting Selection	Bit 0: AI1 Below Minimum Input Setting Selection 0: Corresponds to Minimum Input Setting 1: 0.0% Bit 10: AI2 Below Minimum Input Setting Selection, as above Bit 100: AI3 Below Minimum Input Setting Selection, as above	0	☆	0xF422
P4-35	DI1 Delay Time	0.0s~3600.0s	0.0s	★	0xF423
P4-36	DI2 Delay Time	0.0s~3600.0s	0.0s	★	0xF424
P4-37	DI3 Delay Time	0.0s~3600.0s	0.0s	★	0xF425
P4-38	DI Digital Input Terminal Valid Mode Selection 1	0: High Level Valid 1: Low Level Valid Bit 0: DI1 Bit 10: DI2 Bit 100: DI3 Bit 1000: DI4 Ten Bit 1000: DI5	0	★	0xF426
P4-39	DI Digital Input Terminal Valid Mode Selection 2	0: High Level Valid 1: Low Level Valid Bit 0: DI6 Bit 10: DI7 Bit 100: DI8 Bit 1000: DI9 Ten Bit 1000: DI10	0	★	0xF427
P5 Group Output Terminals					
P5-00	FM and AO2 Terminal Output Mode Selection	Bit 0: FM Terminal Function Selection 0: Pulse Output 1: Switch Output (TA2-TB2-TC2) Bit 10: AO2 Terminal Function Selection 0: Analog Output 1: Switch Output (TA3-TB3-TC3)	11	☆	0xF500
P5-01	Relay Output Function Selection (TA2-TB2-TC2)	0: No Output 1: Inverter Running 2: Fault Output (for free stop faults) 3: Frequency Level Detection FDT1 Output 4: Frequency Reached 5: Zero Speed Running (No Output at Stop) 6: Motor Overload Pre-Alarm 7: Inverter Overload Pre-Alarm 8: Set Count Value Reached	0	☆	0xF501
P5-02	Control Board Relay		2	☆	0xF502

Function Code	Name	Options	Default	Edit Rule	Protocol
	Function Selection (TA1-TB1-TC1)	9: Designated Count Value Reached 10: Length Reached 11: PLC Cycle Completed 12: Cumulative Run Time Reached 13: Frequency Limited 14: Torque Limited 15: Run Ready 16: AI1>AI2 17: Upper Limit Frequency Reached 18: Lower Limit Frequency Reached (Run-Related) 19: Undervoltage State Output 20: Communication Setting 21: Positioning Completed (Reserved) 22: Positioning Approach (Reserved) 23: Zero Speed Running 2 (Output Even at Stop) 24: Cumulative Power-On Time Reached 25: Frequency Level Detection FDT2 Output 26: Frequency 1 Reached Output 27: Frequency 2 Reached Output 28: Current 1 Reached Output 29: Current 2 Reached Output 30: Timing Reached Output 31: AI1 Input Exceeded Limit 32: Load Dropped 33: Reverse Running 34: Zero Current State 35: Module Temperature Reached 36: Output Current Exceeded Limit 37: Lower Limit Frequency Reached (Output Even at Stop) 38: Alarm Output (All Faults) 39: Motor Over-Temperature Pre-Alarm 40: Current Run Time Reached 41: Non-Undervoltage Fault Output (for free stop faults) 45: Brake Output			
P5-03	Relay Output Function Selection (TA3-TB3-TC3)		0	☆	0xF503
P5-04	DO1 Output Function Selection		1	☆	0xF504
P5-05	Expansion Card DO2 Output Selection		4	☆	0xF505
P5-06	FMP Output Function Selection	0: Running Frequency 1: Set Frequency 2: Output Current (100.0% corresponds to 2x motor rated current) 3: Output Torque (Absolute Torque Value) 4: Output Power 5: Output Voltage 6: PULSE Input (100.0% corresponds to 100.0kHz) 7: AI1 8: AI2 9: AI3 (Expansion Card) 10: Length 11: Count Value 12: Communication Setting 13: Motor Speed 14: Output Current (100.0% corresponds to 1000.0A)	0	☆	0xF506

Function Code	Name	Options	Default	Edit Rule	Protocol
		15: Output Voltage (100.0% corresponds to 1000.0V)			
P5-07	AO1 Output Function Selection	16: Output Torque (Actual Torque Value)	0	☆	0xF507
P5-08	AO2 Output Function Selection		1	☆	0xF508
P5-09	FMP Output Maximum Frequency	0.01kHz~100.00kHz	50.00kHz	☆	0xF509
P5-10	AO1 Zero Offset Coefficient	-100.0%~+100.0%	0	☆	0xF50A
P5-11	AO1 Gain	-10.00~+10.00	1	☆	0xF50B
P5-12	AO2 Zero Offset Coefficient	-100.0%~+100.0%	0	☆	0xF50C
P5-13	AO2 Gain	-10.00~+10.00	1	☆	0xF50D
P5-17	FMR Output Delay Time	0.0s~3600.0s	0.0s	☆	0xF511
P5-18	TA1-TB1-TC1 Output Delay Time	0.0s~3600.0s	0.0s	☆	0xF512
P5-19	TA2-TB2-TC2 Output Delay Time	0.0s~3600.0s	0.0s	☆	0xF513
P5-20	DO1 Output Delay Time	0.0s~3600.0s	0.0s	☆	0xF514
P5-21	DO2 Output Delay Time	0.0s~3600.0s	0.0s	☆	0xF515
P5-22	DO Output Terminal Valid State Selection	0: Positive Logic 1: Negative Logic Bit 0: FMR Bit 10: TA1-TB1-TC1 Bit 100: TA3-TB3-TC3 Bit 1000: DO1 (TA2-TB2-TC2) Ten Bit 1000: DO2	0	☆	0xF516
P5-24	FMR Delay Off Time	0.0s~3600.0s	0.0s	☆	0xF518
P5-25	TA1-TB1-TC1 Delay Off Time	0.0s~3600.0s	0.0s	☆	0xF519
P5-26	TA2-TB2-TC2 Delay Off Time	0.0s~3600.0s	0.0s	☆	0xF51A
P5-27	DO1 Delay Off Time	0.0s~3600.0s	0.0s	☆	0xF51B
P5-28	DO2 Delay Off Time	0.0s~3600.0s	0.0s	☆	0xF51C
P6 Group Start/Stop Control					

Function Code	Name	Options	Default	Edit Rule	Protocol
P6-00	Start Mode	0: Direct Start 1: Speed Tracking Restart 2: Pre-Excitation Start	0	☆	0xF600
P6-01	Speed Tracking Mode	0: Start from Stop Frequency 1: Start from Zero Speed 2: Start from Maximum Frequency 3: Start from Current Frequency, Valid for V/F Control	0	★	0xF601
P6-02	Speed Tracking Speed	1~100	20	☆	0xF602
P6-03	Start Frequency	0.00Hz~10.00Hz	0.00Hz	☆	0xF603
P6-04	Start Frequency Hold Time	0.0s~100.0s	0.0s	★	0xF604
P6-05	Start DC Braking Current/Pre-Excitation Current	0%~100%	0	★	0xF605
P6-06	Start DC Braking Time/Pre-Excitation Time	0.0s~100.0s	0.0s	★	0xF606
P6-07	Accel/Decel Mode	0: Linear Accel/Decel 1: S-Curve Accel/Decel A 2: S-Curve Accel/Decel B	0	★	0xF607
P6-08	S-Curve Start Segment Time Proportion	0.0%~(100.0%-P6-09)	0.3	★	0xF608
P6-09	S-Curve End Segment Time Proportion	0.0%~(100.0%-P6-08)	0.3	★	0xF609
P6-10	Stop Mode	0: Deceleration Stop 1: Free Stop	0	☆	0xF60A
P6-11	Stop DC Braking Start Frequency	0.00Hz~Maximum Frequency	0.00Hz	☆	0xF60B
P6-12	Stop DC Braking Wait Time	0.0s~100.0s	0.0s	☆	0xF60C
P6-13	Stop DC Braking Current	0%~180%	0	☆	0xF60D
P6-14	Stop DC Braking Time	0.0s~100.0s	0.0s	☆	0xF60E

Function Code	Name	Options	Default	Edit Rule	Protocol
P6-15	Braking Utilization Rate	0%~100%	1	☆	0xF60F
P6-16	Braking Resistor Voltage Activation Point	200.0~2000.0V	Model-dep	☆	0xF610
P6-18	Speed Tracking Current Magnitude	30%~200%	Model-dep	★	0xF611
P6-19	Speed Tracking Closed-Loop Current KP	10~1000	500	★	0xF612
P6-20	Speed Tracking Closed-Loop Current KI	5~1000	800	★	0xF613
P6-21	Speed Tracking Voltage Rise Time	0~3.0	1	★	0xF614
P6-22	Demagnetization Time	0~5.00	1	★	0xF615
P6-24	Stop Quasi-Stop Frequency	0.00Hz~20.00Hz (If set to non-zero, function enabled)	0.00Hz	☆	0xF617
P6-25	Stop Quasi-Stop Signal Failure Extension Time	0.0s~100.0s	30.0s	☆	0xF618
P6-26	Stop Quasi-Stop Frequency Deceleration Time	0.0s~100.0s	1.0s	☆	0xF619
P7 Group Keypad and Display					
P7-00	Knob Frequency Adjustment Resolution Selection	0: 0.01Hz 1: 0.1Hz 2: 1Hz 3: 10Hz	2	●	0xF700

Function Code	Name	Options	Default	Edit Rule	Protocol
P7-01	JOG/QUICK Key Function Selection	0: Menu Mode Switch 1: Switch Between Operation Panel Command Channel and Remote Command Channel (Terminal or Communication) 2: Forward/Reverse Switch 3: Forward Jog 4: Reverse Jog	3	★	0xF701
P7-02	STOP/RESET Key Function	0: STOP/RESET Key Stop Function Valid Only in Keypad Mode 1: STOP/RESET Key Stop Function Valid in Any Mode	1	☆	0xF702
P7-03	LED Running Display Parameter 1	0000~FFFF Bit00: Running Frequency (Hz) Bit01: Set Frequency (Hz) Bit02: Bus Voltage (V) Bit03: Output Voltage (V) Bit04: Output Current (A) Bit05: Output Power (kW) Bit06: Output Torque (%) Bit07: DI Input State Bit08: DO Output State Bit09: AI1 Voltage (V) Bit10: AI2 Voltage (V) Bit11: AI3 Voltage (V) Bit12: Count Value Bit13: Length Value Bit14: Load Speed Display Bit15: PID Setting	1F	☆	0xF703
P7-04	LED Running Display Parameter 2	0000~FFFF Bit00: PID Feedback Bit01: PLC Stage Bit02: PULSE Input Pulse Frequency (kHz) Bit03: Running Frequency 2 (Hz) Bit04: Remaining Run Time Bit05: AI1 Voltage Before Correction (V) Bit06: AI2 Voltage Before Correction (V) Bit07: AI3 Voltage Before Correction (V) Bit08: Motor Speed Bit09: Current Power-On Time (Hour) Bit10: Current Run Time (Min) Bit11: PULSE Input Pulse Frequency (Hz) Bit12: Communication Setting Value Bit13: Encoder Feedback Speed (Hz) Bit14: Main Frequency X Display (Hz) Bit15: Aux Frequency Y Display (Hz)	0	☆	0xF704

Function Code	Name	Options	Default	Edit Rule	Protocol
P7-05	LED Stop Display Parameter	0000~FFFF Bit00: Set Frequency (Hz) Bit01: Bus Voltage (V) Bit02: DI Input State Bit03: DO Output State Bit04: AI1 Voltage (V) Bit05: AI2 Voltage (V) Bit06: AI3 Voltage (V) Bit07: Count Value Bit08: Length Value Bit09: PLC Stage Bit10: Load Speed Bit11: PID Setting Bit12: PULSE Input Pulse Frequency (kHz)	33	☆	0xF705
P7-06	Load Speed Display Coefficient	0.0001~6.5000	1	☆	0xF706
P7-07	Inverter Module Heatsink Temperature	0.0℃~100.0℃	-	●	0xF707
P7-08	Cumulative Run Time (Non-Resettable)	0h~65535h	-	●	0xF708
P7-09	Cumulative Run Time	0h~65535h	-	●	0xF709
P7-10	Product Number	-	-	●	0xF70A
P7-11	Software Version Number	-	-	●	0xF70B
P7-12	Load Speed Display Decimal Places	20: 0 Decimal Places 21: 1 Decimal Place 22: 2 Decimal Places 23: 3 Decimal Places	21	☆	0xF70C
P7-13	Cumulative Power-On Time	0h~65535h	-	●	0xF70D
P7-14	Cumulative Power Consumption	0kW~65535kWh	-	●	0xF70E
P7-17	Second Row LED Display Parameter	0-16 0: Running Frequency (Hz) 1: Set Frequency (Hz) 2: Bus Voltage (V) 3: Output Voltage (V) 4: Output Current (A) 5: Output Power (kW) 6: Output Torque (%) 7: DI Digital Input Terminal Input State 8: DO Output State			0xF711

Function Code	Name	Options	Default	Edit Rule	Protocol
		9: AI1 Voltage (V) 10: AI2 Voltage (V) 11: AI3 Voltage (V) 12: Count Value 13: Length Value 14: Load Speed Display 15: PID Setting 16: PID Feedback			
P7-18	UP/DOWN Effective Variable Display Selection	0: Set Variable 1: Current Variable Note: Whether UP/DOWN modification switches the current display variable to the set variable	0	☆	0xF712
P8 Group Auxiliary Function Parameters					
P8-00	Jog Running Frequency	0.00Hz~Maximum Frequency	2.00Hz	☆	0xF800
P8-01	Jog Acceleration Time	0.0s~6500.0s	20.0s	☆	0xF801
P8-02	Jog Deceleration Time	0.0s~6500.0s	20.0s	☆	0xF802
P8-03	Acceleration Time 2	0.0s~6500.0s	Model-dep	☆	0xF803
P8-04	Deceleration Time 2	0.0s~6500.0s	Model-dep	☆	0xF804
P8-05	Acceleration Time 3	0.0s~6500.0s	Model-dep	☆	0xF805
P8-06	Deceleration Time 3	0.0s~6500.0s	Model-dep	☆	0xF806
P8-07	Acceleration Time 4	0.0s~6500.0s	Model-dep	☆	0xF807
P8-08	Deceleration Time 4	0.0s~6500.0s	Model-dep	☆	0xF808
P8-09	Jump Frequency 1	0.00Hz~Maximum Frequency	0.00Hz	☆	0xF809
P8-10	Jump Frequency 2	0.00Hz~Maximum Frequency	0.00Hz	☆	0xF80A
P8-11	Jump Frequency Amplitude	0.00Hz~Max Frequency	0.00Hz	☆	0xF80B
P8-12	Forward/Reverse Dead Band Time	0.0s~3000.0s	0.0s	☆	0xF80C
P8-13	Reverse Control Enable	0: Allow 1: Disable	0	☆	0xF80D

Function Code	Name	Options	Default	Edit Rule	Protocol
P8-14	Operation Mode When Frequency Below Lower Limit	0: Run at Lower Limit Freq 1: Stop 2: Zero Speed Operation	0	☆	0xF80E
P8-15	Droop Control	0.00Hz~10.00Hz	0.00Hz	☆	0xF80F
P8-16	Set Power-on Cumulative Time	0h~65000h	0h	☆	0xF810
P8-17	Set Operation Cumulative Time	0h~65000h	0h	☆	0xF811
P8-18	Startup Protection Selection	0: No Protection 1: Protection	0	☆	0xF812
P8-19	Frequency Detection Value (FDT1)	0.00Hz~Max Frequency	50.00Hz	☆	0xF813
P8-20	Frequency Detection Hysteresis (FDT1)	0.0%~100.0% (of FDT1 level)	0.05	☆	0xF814
P8-21	Frequency Arrival Detection Width	0.0%~100.0% (of Max Frequency)	0	☆	0xF815
P8-22	Jump Frequency Validity During Accel/Decel	0: Invalid 1: Valid	0	☆	0xF816
P8-25	Accel Time1/Accel Time2 Switch Frequency	0.00Hz~Max Frequency	0.00Hz	☆	0xF819
P8-26	Decel Time1/Decel Time2 Switch Frequency	0.00Hz~Max Frequency	0.00Hz	☆	0xF81A
P8-27	Terminal Jog Priority	0: Invalid 1: Valid 2: Invalid during running then decel stop	0	☆	0xF81B
P8-28	Frequency Detection Value (FDT2)	0.00Hz~Max Frequency	50.00Hz	☆	0xF81C
P8-29	Frequency Detection Hysteresis (FDT2)	0.0%~100.0% (of FDT2 level)	0.05	☆	0xF81D

Function Code	Name	Options	Default	Edit Rule	Protocol
P8-30	Arbitrary Frequency Detection Value 1	0.00Hz~Max Frequency	50.00Hz	☆	0xF81E
P8-31	Arbitrary Frequency Detection Width 1	0.0%~100.0% (of Max Frequency)	0	☆	0xF81F
P8-32	Arbitrary Frequency Detection Value 2	0.00Hz~Max Frequency	50.00Hz	☆	0xF820
P8-33	Arbitrary Frequency Detection Width 2	0.0%~100.0% (of Max Frequency)	0	☆	0xF821
P8-34	Zero Current Detection Level	0.0%~300.0% (100%=Motor Rated Current)	0.05	☆	0xF822
P8-35	Zero Current Detection Delay Time	0.01s~600.00s	0.10s	☆	0xF823
P8-36	Output Current Overlimit Value	0.0% (No Detection) 0.1%~300.0% (Motor Rated Current)	2	☆	0xF824
P8-37	Output Current Overlimit Detection Delay	0.00s~600.00s	0.00s	☆	0xF825
P8-38	Arbitrary Current Detection 1	0.0%~300.0% (Motor Rated Current)	1	☆	0xF826
P8-39	Arbitrary Current Detection Width 1	0.0%~300.0% (Motor Rated Current)	0	☆	0xF827
P8-40	Arbitrary Current Detection 2	0.0%~300.0% (Motor Rated Current)	1	☆	0xF828
P8-41	Arbitrary Current Detection Width 2	0.0%~300.0% (Motor Rated Current)	0	☆	0xF829
P8-42	Timer Function Selection	0: Disabled 1: Enabled	0	☆	0xF82A
P8-43	Timer Operation Time Selection	0: P8-44 Setting 1: AI1 2: AI2 3: AI3 (10V=P8-44)	0	☆	0xF82B

Function Code	Name	Options	Default	Edit Rule	Protocol
P8-44	Timer Operation Time	0.0Min~6500.0Min	0.0Min	☆	0xF82C
P8-45	AI1 Input Voltage Protection Lower Limit	0.00V~P8-46	3.10V	☆	0xF82D
P8-46	AI1 Input Voltage Protection Upper Limit	P8-45~10.00V	6.80V	☆	0xF82E
P8-47	Module Overtemperature Threshold	0℃~100℃	75℃	☆	0xF82F
P8-48	Cooling Fan Control	0: Run with motor 1: Always on (If >40℃, fan runs even when stopped)	0	☆	0xF830
P8-52	Input Voltage Calibration Coefficient	0~150%	1	☆	0xF834
P8-53	Current Operation Time Setting	0.0Min~6500.0Min	0.0Min	☆	0xF835
P9 Group Error and Production					
P9-00	Motor Overload Protection	0: Disabled, 1: Enabled	1	☆	0xF900
P9-01	Motor Overload Protection Gain	0.20~10.00	1	☆	0xF901
P9-02	Motor Overload Warning Coefficient	50%~100%	0.8	☆	0xF902
P9-03	Overvoltage Stall Gain	0~100	30	☆	0xF903
P9-04	Overvoltage Stall Protection Voltage	200~2000V	760V	☆	0xF904
P9-05	Overcurrent Stall Gain	0~100	20	☆	0xF905
P9-06	Overcurrent Stall Protection Current	50%~200% (of Motor Rated Current)	1.5	☆	0xF906
P9-07	Ground Fault Protection	Bit0: Pre-power Ground Fault Check (0, 1) Bit1: Runtime Ground Fault Check	11 (Both On)	☆	0xF907

Function Code	Name	Options	Default	Edit Rule	Protocol
P9-08	V/F Weak Magnetic Zone Current Limit	50%~300%	2	☆	0xF908
P9-09	Auto Fault Reset Count	0~20	0	☆	0xF909
P9-10	DO Action During Auto Reset	0: No Action, 1: Action	0	☆	0xF90A
P9-11	Auto Fault Reset Interval	0.1s~100.0s	1.0s	☆	0xF90B
P9-12	Input Phase Loss/Contactor Protection	Bit0: Input Phase Loss (0, 1) Bit1: Contactor Check	11 (Both On)	☆	0xF90C
P9-13	Output Phase Loss Protection	0: Off, 1: On	1	☆	0xF90D
P9-14	First Fault Type	0 No Fault 1 Reserved 2 Acceleration Overcurrent 3 Deceleration Overcurrent 4 Constant Speed Overcurrent 5 Acceleration Overvoltage 6 Deceleration Overvoltage 7 Constant Speed Overvoltage 8 Braking Resistor Overload 9 Undervoltage 10 Inverter Overload 11 Motor Overload 12 Input Phase Loss 13 Output Phase Loss 14 Module Overtemperature 15 External Fault 16 Communication Error 17 Contactor Fault 18 Current Detection Error 19 Motor Tuning Error 20 Encoder/PG Card Error 21 Parameter Read/Write Error 22 Inverter Hardware Fault 23 Motor Ground Fault 24 Reserved 25 Reserved 26 Run Time Reached 27 User-Defined Fault 1 28 User-Defined Fault 2 29 Power-On Time Reached 30 Load Loss 31 PID Feedback Loss During Operation 40 Fast Current Limit Timeout 41 Motor Switching During Operation 42 Speed Deviation Excessive	-	●	0xF90E
P9-15	Second Fault Type		-	●	0xF90F
P9-16	Third (Latest) Fault Type		-	●	0xF910

Function Code	Name	Options	Default	Edit Rule	Protocol
		43 Motor Overspeed 45 Motor Overtemperature 51 Initial Position Error			
P9-17	Third Fault Frequency	0.00Hz	0.01Hz	●	0xF911
P9-18	Third Fault Current	≤55kW: 0.01A >55kW: 0.1A	-	●	0xF912
P9-19	Third Fault DC Bus Voltage	0.0V	0.1V	●	0xF913
P9-20	Third Fault Input Terminal Status	0	1	●	0xF914
P9-21	Third Fault Output Terminal Status	0	1	●	0xF915
P9-22	Third Fault Inverter Status	0	1	●	0xF916
P9-23	Third Fault Power-on Time	0	1min	●	0xF917
P9-24	Third Fault Operation Time	0	1min	●	0xF918
P9-27	Second Fault Frequency	-	-	●	0xF91B
P9-28	Current at Second Fault	≤55kW: 0.01A >55kW: 0.1A	-	●	0xF91C
P9-29	DC Bus Voltage at Second Fault	0000.0V (0.1V resolution)	-	●	0xF91D
P9-30	Input Terminal Status at Second Fault	0 or 1	-	●	0xF91E
P9-31	Output Terminal Status at Second Fault	0 or 1	-	●	0xF91F
P9-32	Inverter Status at	0 or 1	-	●	0xF920

Function Code	Name	Options	Default	Edit Rule	Protocol
	Second Fault				
P9-33	Power-On Time at Second Fault	0~ (1min resolution)	-	●	0xF921
P9-34	Runtime at Second Fault	0~ (1min resolution)	-	●	0xF922
P9-37	Frequency at First Fault	000.00Hz (0.01Hz resolution)	-	●	0xF925
P9-38	Current at First Fault	≤55kW: 0.01A >55kW: 0.1A	-	●	0xF926
P9-39	DC Bus Voltage at First Fault	0000.0V (0.1V resolution)	-	●	0xF927
P9-40	Input Terminal Status at First Fault	0 or 1	-	●	0xF928
P9-41	Output Terminal Status at First Fault	0 or 1	-	●	0xF929
P9-42	Inverter Status at First Fault	0 or 1	-	●	0xF92A
P9-43	Power-On Time at First Fault	0~ (1min resolution)	-	●	0xF92B
P9-44	Runtime at First Fault	0~ (1min resolution)	-	●	0xF92C
P9-47	Fault Protection Action 1	Units digit: Motor Overload (11) 0: Free stop 1: Stop via stop method 2: Continue running	0	☆	0xF92F
P9-48	Fault Protection Action 2	Ten-Bit 1000: Communication Error (16) Units digit: Encoder/PG Card Error (20) 0: Free stop 1: Stop via stop method 2: Continue running	0	☆	0xF930
P9-49	Fault Protection Action 3	Bit 1000: Motor Overheat (25) Bit 100: Runtime Limit Reached (26) Units digit: Custom Fault 1 (27) 0: Free stop 1: Deceleration stop 2: Continue at 7% rated frequency	0	☆	0xF931
P9-50	Fault Protection Action 4	Units digit: Speed Deviation (42) 0: Free stop 1: Stop via stop method 2: Continue running	0	☆	0xF932

Function Code	Name	Options	Default	Edit Rule	Protocol
P9-54	Continue Running Frequency Selection	0: Current frequency 1: Set frequency 2: Upper limit frequency 3: Lower limit frequency 4: Backup frequency	0	☆	0xF936
P9-55	Backup Frequency	0.0%~100.0% (relative to P0-10)	1	☆	0xF937
P9-56	Motor Temperature Sensor Setup	Bit 100: AI3 sensor type 0: Disabled 1-6: PT100/PT1000/KTY84/etc. (see manual)	0	☆	0xF938
P9-57	Motor Overheat Protection Threshold	0°C~200°C	110°C	☆	0xF939
P9-58	Motor Overheat Pre-Alarm Threshold	0°C~200°C	90°C	☆	0xF93A
P9-59	Instant Power Loss Action	0: Disabled 1: Decelerate 2: Decelerate and stop	0	☆	0xF93B
P9-60	Voltage Threshold for Pause	80.0%~100.0%	0.85	☆	0xF93C
P9-61	Voltage Recovery Time	0.00s~100.00s	0.50s	☆	0xF93D
P9-62	Voltage Threshold for Power Loss	60.0%~100.0% (of nominal DC bus voltage)	0.8	☆	0xF93E
P9-63	Load Loss Protection	0: Disabled 1: Enabled	0	☆	0xF93F
P9-64	Load Loss Detection Level	0.0%~100.0%	0.1	☆	0xF940
P9-65	Load Loss Detection Time	0.0s~60.0s	1.0s	☆	0xF941
P9-67	Overspeed Detection Threshold	0.0%~50.0% (of max frequency)	0.2	☆	0xF942
P9-68	Overspeed Detection Time	0.0s~60.0s	1.0s	☆	0xF943
P9-69	Speed Deviation Detection Threshold	0.0%~50.0% (of max frequency)	0.2	☆	0xF944
P9-70	Speed Deviation Detection	0.0s~60.0s	-	☆	0xF945

Function Code	Name	Options	Default	Edit Rule	Protocol
	Time				
P9-74	V/F Overvoltage Suppression Rising Frequency	5Hz~50Hz	5Hz	☆	0xF949
P9-75	Initial Position Fault Enable	Bit 0: Initial Position Fault 0: Disable 1: Enable Bit 10: Loaded Zero Position Angle Tuning Fault 0: Disable 1: Enable	11	☆(E)	0xF94A
P9-78	Initial Position Identification Initial Pulse Width Time	5~2000	20	☆(E)	0xF94D
P9-79	AI2 Temperature Protection Value	0~200℃	100℃ (Synchronous Motor)	☆(E)	0xF94E
P9-80	AI3 Temperature Protection Value	0~200℃	100℃ (Synchronous Motor)	☆(E)	0xF94F
PA Group PID Function					
PA-00	PID Setpoint Source	0: PA-01 Setting 1: AI1 2: AI2 3: AI3 4: PULSE Pulse Setting (DI5) 5: Communication Given 6: Multi-Step Command Given 7: Keypad Encoder	0	☆	0xFA00
PA-01	PID Digital Setpoint	0.0%~100.0%	0.5	☆	0xFA01
PA-02	PID Feedback Source	0: AI1 1: AI2 2: AI3 3: AI1-AI2 4: PULSE Pulse Setting (DI5) 5: Communication Given 6: AI1+AI2 7: MAX(|AI1|, |AI2|) 8: MIN(|AI1|, |AI2|)	0	☆	0xFA02
PA-03	PID Action Direction	0: Positive Action 1: Reverse Action	0	☆	0xFA03
PA-04	PID Setpoint Feedback Range	0~65535	100	☆	0xFA04
PA-05	Proportional Gain Kp1	0.0~100.0	20	☆	0xFA05

Function Code	Name	Options	Default	Edit Rule	Protocol
PA-06	Integral Time Ti1	0.01s~10.00s	2.00s	☆	0xFA06
PA-07	Derivative Time Td1	0.000s~10.000s	0.000s	☆	0xFA07
PA-08	PID Reverse Cutoff Frequency	0.00~Maximum Frequency	0.00Hz	☆	0xFA08
PA-09	PID Deviation Limit	0.0%~100.0%	0	☆	0xFA09
PA-10	PID Derivative Limit	0.00%~100.00%	0.001	☆	0xFA0A
PA-11	PID Setpoint Change Time	0.00~650.00s	0.00s	☆	0xFA0B
PA-12	PID Feedback Filter Time	0.00~60.00s	0.00s	☆	0xFA0C
PA-13	PID Output Filter Time	0.00~60.00s	0.00s	☆	0xFA0D
PA-14	Pressure Setpoint and Feedback Decimal Places	0: No Decimal 1: 1 Decimal 2: 2 Decimals	0	☆	0xFA0E
PA-15	Proportional Gain Kp2	0.0~100.0	20	☆	0xFA0F
PA-16	Integral Time Ti2	0.01s~10.00s	2.00s	☆	0xFA10
PA-17	Derivative Time Td2	0.000s~10.000s	0.000s	☆	0xFA11
PA-18	PID Parameter Switching Condition	0: No Switching 1: Switch via DI Terminal 2: Auto Switch Based on Deviation	0	☆	0xFA12
PA-19	PID Parameter Switching Deviation 1	0.0%~PA-20	0.2	☆	0xFA13
PA-20	PID Parameter Switching Deviation 2	PA-19~100.0%	0.8	☆	0xFA14
PA-21	PID Initial Value	0.0%~100.0%	0	☆	0xFA15
PA-22	PID Initial Value Hold Time	0.00~650.00s	0.00s	☆	0xFA16
PA-23	Maximum Forward Deviation Between Two Outputs	0.00%~100.00%	0.01	☆	0xFA17
PA-24	Maximum Reverse	0.00%~100.00%	0.01	☆	0xFA18

Function Code	Name	Options	Default	Edit Rule	Protocol
	Deviation Between Two Outputs				
PA-25	PID Integral Property	Bit 0: Integral Separation 0: Invalid 1: Valid Bit 10: Stop Integration After Reaching Limit 0: Continue Integration 1: Stop Integration	0	☆	0xFA19
PA-26	PID Feedback Loss Detection Value	0.0%: No Feedback Loss Detection 0.1%~100.0%	0	☆	0xFA1A
PA-27	PID Feedback Loss Detection Time	0.0s~20.0s	0.0s	☆	0xFA1B
PA-28	PID Stop Calculation	0: No Calculation at Stop 1: Calculate at Stop	0	☆	0xFA1C
PA-29	PID Sampling Time	0~10	1	☆	0xFA1D
PA-30	PID Feedforward Compensation Gain	0~5000	0	☆	0xFA1E
PA-31	PID Feedforward Compensation Lower Limit Frequency	0.00Hz~P0-10 (Maximum Frequency)	5.00Hz	☆	0xFA1F
PA-32	PID Power-On Delay Disconnection Detection Time	0.0s~200.0s	8.0s	☆	0xFA20
PA-33	Stop Brake Action Frequency	0.00Hz~P0-12 (Upper Limit Frequency)	1.50Hz	☆	0xFA21
PA-34	Brake Action Delay Time	0.0s~200.0s	5.0s	☆	0xFA22
Pb Group Swing Frequency, Fixed Length, and Counting					
Pb-00	Swing Frequency Setting Mode	0: Relative to Center Frequency 1: Relative to Maximum Frequency	0	☆	0xFb00
Pb-01	Swing Frequency Amplitude	0.0%~100.0%	0	☆	0xFb01
Pb-02	Sudden Jump Frequency Amplitude	0.0%~50.0%	0	☆	0xFb02
Pb-03	Swing Frequency Period	0.1s~3000.0s	10.0s	☆	0xFb03

Function Code	Name	Options	Default	Edit Rule	Protocol
Pb-04	Swing Frequency Triangular Wave Rise Time	0.1%~100.0%	0.5	☆	0xFb04
Pb-05	Set Length	0m~65535m	1000m	☆	0xFb05
Pb-06	Actual Length	0m~65535m	0m	☆	0xFb06
Pb-07	Pulses Per Meter	0.1~6553.5	100	☆	0xFb07
Pb-08	Set Count Value	1~65535	1000	☆	0xFb08
Pb-09	Designated Count Value	1~65535	1000	☆	0xFb09
PC Group Multi-Step Command, Simple PLC					
PC-00	Multi-Step Command 0	-100.0%~100.0%	0	☆	0xFC00
PC-01	Multi-Step Command 1	-100.0%~100.0%	0	☆	0xFC01
PC-02	Multi-Step Command 2	-100.0%~100.0%	0	☆	0xFC02
PC-03	Multi-Step Command 3	-100.0%~100.0%	0	☆	0xFC03
PC-04	Multi-Step Command 4	-100.0%~100.0%	0	☆	0xFC04
PC-05	Multi-Step Command 5	-100.0%~100.0%	0	☆	0xFC05
PC-06	Multi-Step Command 6	-100.0%~100.0%	0	☆	0xFC06
PC-07	Multi-Step Command 7	-100.0%~100.0%	0	☆	0xFC07
PC-08	Multi-Step Command 8	-100.0%~100.0%	0	☆	0xFC08
PC-09	Multi-Step Command 9	-100.0%~100.0%	0	☆	0xFC09
PC-10	Multi-Step Command 10	-100.0%~100.0%	0	☆	0xFC0A
PC-11	Multi-Step Command 11	-100.0%~100.0%	0	☆	0xFC0B
PC-12	Multi-Step Command 12	-100.0%~100.0%	0	☆	0xFC0C
PC-13	Multi-Step Command 13	-100.0%~100.0%	0	☆	0xFC0D
PC-14	Multi-Step Command 14	-100.0%~100.0%	0	☆	0xFC0E
PC-15	Multi-Step Command 15	-100.0%~100.0%	0	☆	0xFC0F
PC-16	Simple PLC Run Mode	0: Stop After Single Run 1: Maintain Final Value After Single Run 2: Continuous Cycle	0	☆	0xFC10

Function Code	Name	Options	Default	Edit Rule	Protocol
PC-17	Simple PLC Power-Off Memory Selection	Bit 0: Power-Off Memory Selection 0: No Memory at Power-Off 1: Memory at Power-Off Bit 10: Stop Memory Selection 0: No Memory at Stop 1: Memory at Stop	0	☆	0xFC11
PC-18	Simple PLC Stage 0 Run Time	0.0s(h)~6553.5s(h)	0.0s(h)	☆	0xFC12
PC-19	Simple PLC Stage 0 Accel/Decel Time Selection	0~3	0	☆	0xFC13
PC-20	Simple PLC Stage 1 Run Time	0.0s(h)~6553.5s(h)	0.0s(h)	☆	0xFC14
PC-21	Simple PLC Stage 1 Accel/Decel Time Selection	0~3	0	☆	0xFC15
PC-22	Simple PLC Stage 2 Run Time	0.0s(h)~6553.5s(h)	0.0s(h)	☆	0xFC16
PC-23	Simple PLC Stage 2 Accel/Decel Time Selection	0~3	0	☆	0xFC17
PC-24	Simple PLC Stage 3 Run Time	0.0s(h)~6553.5s(h)	0.0s(h)	☆	0xFC18
PC-25	Simple PLC Stage 3 Accel/Decel Time Selection	0~3	0	☆	0xFC19
PC-26	Simple PLC Stage 4 Run Time	0.0s(h)~6553.5s(h)	0.0s(h)	☆	0xFC1A
PC-27	Simple PLC Stage 4 Accel/Decel Time Selection	0~3	0	☆	0xFC1B
PC-28	Simple PLC Stage 5 Run Time	0.0s(h)~6553.5s(h)	0.0s(h)	☆	0xFC1C
PC-29	Simple PLC Stage 5 Accel/Decel Time	0~3	0	☆	0xFC1D

Function Code	Name	Options	Default	Edit Rule	Protocol
	Selection				
PC-30	Simple PLC Stage 6 Run Time	0.0s(h)~6553.5s(h)	0.0s(h)	☆	0xFC1E
PC-31	Simple PLC Stage 6 Accel/Decel Time Selection	0~3	0	☆	0xFC1F
PC-32	Simple PLC Stage 7 Run Time	0.0s(h)~6553.5s(h)	0.0s(h)	☆	0xFC20
PC-33	Simple PLC Stage 7 Accel/Decel Time Selection	0~3	0	☆	0xFC21
PC-34	Simple PLC Stage 8 Run Time	0.0s(h)~6553.5s(h)	0.0s(h)	☆	0xFC22
PC-35	Simple PLC Stage 8 Accel/Decel Time Selection	0~3	0	☆	0xFC23
PC-36	Simple PLC Stage 9 Run Time	0.0s(h)~6553.5s(h)	0.0s(h)	☆	0xFC24
PC-37	Simple PLC Stage 9 Accel/Decel Time Selection	0~3	0	☆	0xFC25
PC-38	Simple PLC Stage 10 Run Time	0.0s(h)~6553.5s(h)	0.0s(h)	☆	0xFC26
PC-39	Simple PLC Stage 10 Accel/Decel Time Selection	0~3	0	☆	0xFC27
PC-40	Simple PLC Stage 11 Run Time	0.0s(h)~6553.5s(h)	0.0s(h)	☆	0xFC28
PC-41	Simple PLC Stage 11 Accel/Decel Time Selection	0~3	0	☆	0xFC29

Function Code	Name	Options	Default	Edit Rule	Protocol
PC-42	Simple PLC Stage 12 Run Time	0.0s(h)~6553.5s(h)	0.0s(h)	☆	0xFC2A
PC-43	Simple PLC Stage 12 Accel/Decel Time Selection	0~3	0	☆	0xFC2B
PC-44	Simple PLC Stage 13 Run Time	0.0s(h)~6553.5s(h)	0.0s(h)	☆	0xFC2C
PC-45	Simple PLC Stage 13 Accel/Decel Time Selection	0~3	0	☆	0xFC2D
PC-46	Simple PLC Stage 14 Run Time	0.0s(h)~6553.5s(h)	0.0s(h)	☆	0xFC2E
PC-47	Simple PLC Stage 14 Accel/Decel Time Selection	0~3	0	☆	0xFC2F
PC-48	Simple PLC Stage 15 Run Time	0.0s(h)~6553.5s(h)	0.0s(h)	☆	0xFC30
PC-49	Simple PLC Stage 15 Accel/Decel Time Selection	0~3	0	☆	0xFC31
PC-50	Simple PLC Run Time Unit	0: s (Seconds) 1: h (Hours)	0	☆	0xFC32
PC-51	Multi-Step Command 0 Setting Mode	0 Function Code PC-00 Setting 1 AI1 2 AI2 3 AI3 4 PULSE 5 PID (PID Controller Output) 6 Preset Frequency (P0-08), adjustable via UP/DOWN	0	☆	0xFC33
PC-52	Multi-Step Speed Priority Selection	0: Not Priority 1: Priority	0	☆	0xFC34
PC-53	Multi-Step Speed Frequency Unit Selection	0: % 1: Hz	1	☆	0xFC35
PD Group Communication Parameters					
Pd-00	Baud Rate	Bit 0: MODBUS 0: 300BPS	5005	☆	0xFd00

Function Code	Name	Options	Default	Edit Rule	Protocol
		1: 600BPS 2: 1200BPS 3: 2400BPS 4: 4800BPS 5: 9600BPS 6: 19200BPS 7: 38400BPS 8: 57600BPS 9: 115200BPS Bit 10: Profibus-DP 0: 115200BPS 1: 208300BPS 2: 256000BPS 3: 512000BPS Bit 100: Reserved Bit 1000: CANlink Baud Rate 0: 20k 1: 50k 2: 100k 3: 125k 4: 250k 5: 500k 6: 1M			
Pd-01	Data Format	0: No Parity (8-N-2) 1: Even Parity (8-E-1) 2: Odd Parity (8-O-1) 3: 8-N-1	0	☆	0xFd01
Pd-02	Local Address	1~247, 0 for Broadcast Address	1	☆	0xFd02
Pd-03	Response Delay	0ms~20ms	2	☆	0xFd03
Pd-04	Communication Timeout Time	0.0 (Invalid), 0.1s~60.0s	0	☆	0xFd04
Pd-05	Data Transfer Format Selection	Bit 0: MODBUS 0: Non-Standard MODBUS Protocol 1: Standard MODBUS Protocol 2: Non-Standard MODBUS Protocol (No Response to Write Commands) Bit 10: Profibus-DP 0: PFO1 Format 1: PFO2 Format 2: PFO3 Format 3: PFO5 Format	31	☆	0xFd05
Pd-06	Communication Read Current Resolution	0: 0.01A 1: 0.1A	0	☆	0xFd06
Pd-08	CANlink Communication Timeout Time	0.0s: Invalid 0.1~60.0s	0	☆	0xFd08

Function Code	Name	Options	Default	Edit Rule	Protocol
PE Group User-Defined Function Codes					
PE-00	User Function Code 0	uP0-00~uPP-xx uH0-00~uHF-xx uU0-00~uU3-xx	uU3-17	☆	0xFE00
PE-01	User Function Code 1		uU3-16	☆	0xFE01
PE-02	User Function Code 2		uP0-00	☆	0xFE02
PE-03	User Function Code 3		uP0-00	☆	0xFE03
PE-04	User Function Code 4		uP0-00	☆	0xFE04
PE-05	User Function Code 5		uP0-00	☆	0xFE05
PE-06	User Function Code 6		uP0-00	☆	0xFE06
PE-07	User Function Code 7		uP0-00	☆	0xFE07
PE-08	User Function Code 8		uP0-00	☆	0xFE08
PE-09	User Function Code 9		uP0-00	☆	0xFE09
PE-10	User Function Code 10		uP0-00	☆	0xFE0A
PE-11	User Function Code 11		uP0-00	☆	0xFE0B
PE-12	User Function Code 12		uP0-00	☆	0xFE0C
PE-13	User Function Code 13		uP0-00	☆	0xFE0D
PE-14	User Function Code 14		uP0-00	☆	0xFE0E
PE-15	User Function Code 15		uP0-00	☆	0xFE0F
PE-16	User Function Code 16		uP0-00	☆	0xFE10
PE-17	User Function Code 17		uP0-00	☆	0xFE11
PE-18	User Function Code 18		uP0-00	☆	0xFE12
PE-19	User Function Code 19		uP0-00	☆	0xFE13
PE-20	User Function Code 20		uU0-68	☆	0xFE14
PE-21	User Function Code 21		uU0-69	☆	0xFE15
PE-22	User Function Code 22		uP0-00	☆	0xFE16
PE-23	User Function Code 23		uP0-00	☆	0xFE17
PE-24	User Function Code 24		uP0-00	☆	0xFE18

Function Code	Name	Options	Default	Edit Rule	Protocol
PE-25	User Function Code 25		uP0-00	☆	0xFE19
PE-26	User Function Code 26		uP0-00	☆	0xFE1A
PE-27	User Function Code 27		uP0-00	☆	0xFE1B
PE-28	User Function Code 28		uP0-00	☆	0xFE1C
PE-29	User Function Code 29		uP0-00	☆	0xFE1D
PE-30	User Function Code 30		uP0-00	☆	0xFE1E
PE-31	User Function Code 31		uP0-00	☆	0xFE1F
PP Group Function Code Management					
PP-00	User Password	0~65535	0	☆	0x1F00
PP-01	Parameter Initialization	0: No Operation 01: Restore Factory Parameters, Excluding Motor Parameters 02: Clear Record Information 04: Restore User Backup Parameters 501: Backup Current User Parameters	0	★	0x1F01
PP-02	Function Parameter Group Display Selection	Bit 0: U Group Display Selection 0: Do Not Display 1: Display Bit 10: A Group Display Selection 0: Do Not Display 1: Display	11	★	0x1F02
PP-03	Custom Parameter Group Display Selection	Bit 0: User-Defined Parameter Group Display			
PP-04	Function Code Modification Attribute	0: Modifiable, 1: Non-modifiable	0	☆	0x1F04
PP-05	Model Setting	1: G-type Machine, 2: P-type Machine	1	★	0x1F05
H0 Group Torque Control Parameters					
H0-00	Speed/Torque Control Mode Selection	0: Speed Control, 1: Torque Control 0: Digital Setting (H0-03), 1: AI1	0	★	0xA000
H0-01	Torque Control Mode Torque Setting Source Selection	2: AI2, 3: AI3 4: PULSE Pulse, 5: Communication Command 6: MIN(AI1,AI2), 7: MAX(AI1,AI2) (Full range of options 1-7 corresponds to H0-03 digital setting)	0	★	0xA001
H0-03	Torque Control Mode Torque Digital Setting	-200.0%~200.0%	150.00%	☆	0xA003

Function Code	Name	Options	Default	Edit Rule	Protocol
H0-05	Torque Control Forward Maximum Frequency	0.00Hz~Maximum Frequency	50.00Hz	☆	0xA005
H0-06	Torque Control Reverse Maximum Frequency	0.00Hz~Maximum Frequency	50.00Hz	☆	0xA006
H0-07	Torque Control Acceleration Time	0.00s~65000s	0.00s	☆	0xA007
H0-08	Torque Control Deceleration Time	0.00s~65000s	0.00s	☆	0xA008
		H1 Group Virtual IO			
H1-00	Virtual VDI1 Terminal Function	0~59	0	★	0xA100
H1-01	Virtual VDI2 Terminal Function	0~59	0	★	0xA101
H1-02	Virtual VDI3 Terminal Function	0~59	0	★	0xA102
H1-03	Virtual VDI4 Terminal Function Selection	0~59	0	★	0xA103
H1-04	Virtual VDI5 Terminal Function Selection	0~59	0	★	0xA104
H1-05	Virtual VDI Terminal Status Setting Mode	0: VS validity determined by virtual VDOx state 1: VS validity set by function code H1-06 Units place: Virtual VDI1 Bit 0: Virtual VDI1 Bit 10: Virtual VDI2 Bit 100: Virtual VDI3 Bit 1000: Virtual VDI4 0: non-valid 1: valid	0	★	0xA105
H1-06	Virtual VDI Terminal Status Setting	Bit 10000: Virtual VDI5 Bit 10: Virtual VDI2 Bit 100: Virtual VDI3 Bit 1000: Virtual VDI4 Bit 10000: Virtual VDI5	0	★	0xA106

Function Code	Name	Options	Default	Edit Rule	Protocol
H1-08	AI2 Terminal Function Selection (as Digital Input)	0~59	0	★	0xA108
H1-09	AI3 Terminal Function Selection (as Digital Input)	0~59	0	★	0xA109
H1-10	Analog Signal Terminal Effective Mode Selection (as Digital Input)	0: High-level effective 1: Low-level effective Bit 0: AI1 Bit 10: AI2 Bit 100: AI3	0	★	0xA10A
H1-11	Virtual VDO1 Output Function Selection	0: Internally short-circuited with physical Sx 1~40: Refer to P5 Group Physical DO Output Selection	0	☆	0xA10B
H1-12	Virtual VDO2 Output Function Selection	0: Internally short-circuited with physical Sx 1~40: Refer to P5 Group Physical DO Output Selection	0	☆	0xA10C
H1-13	Virtual VDO3 Output Function Selection	0: Internally short-circuited with physical Sx 1~40: Refer to P5 Group Physical DO Output Selection	0	☆	0xA10D
H1-14	Virtual VDO4 Output Function Selection	0: Internally short-circuited with physical Sx 1~40: Refer to P5 Group Physical DO Output Selection	0	☆	0xA10E
H1-15	Virtual VDO5 Output Function Selection	0: Internally short-circuited with physical Sx 1~40: Refer to P5 Group Physical DO Output Selection	0	☆	0xA10F
H1-16	VDO1 Output Delay Time	0.0s~3600.0s	0.0s	☆	0xA110
H1-17	VDO2 Output Delay Time	0.0s~3600.0s	0.0s	☆	0xA111
H1-18	VDO3 Output Delay Time	0.0s~3600.0s	0.0s	☆	0xA112
H1-19	VDO4 Output Delay Time	0.0s~3600.0s	0.0s	☆	0xA113
H1-20	VDO5 Output Delay Time	0.0s~3600.0s	0.0s	☆	0xA114
H1-21	VDO Output Terminal Active State Selection	0: Positive logic 1: Negative logic Bit 0: VDO1 Bit 10: VDO2 Bit 100: VDO3 Bit 1000: VDO4 Bit 10000: VDO5	0	☆	0xA115
H2 Group (Second Motor Control Parameters)					

Function Code	Name	Options	Default	Edit Rule	Protocol
H2-00	Motor Type Selection	0: Standard Induction Motor 1: Variable-Frequency Induction Motor 2: Permanent Magnet Synchronous Motor	0	★	0xA200
H2-01	Motor Rated Power	0.1kW ~ 1000.0kW	Model-Dependent	★	0xA201
H2-02	Motor Rated Voltage	1V ~ 2000V	Model-Dependent	★	0xA202
H2-03	Motor Rated Current	0.01A ~ 655.35A (Drive Power ≤55kW) 0.1A ~ 6553.5A (Drive Power >55kW)	Model-Dependent	★	0xA203
H2-04	Motor Rated Frequency	0.01Hz ~ Max Frequency	Model-Dependent	★	0xA204
H2-05	Motor Rated Speed	1rpm ~ 65535rpm	Model-Dependent	★	0xA205
H2-06	Induction Motor Stator Resistance	0.001Ω ~ 65.535Ω (≤55kW) 0.0001Ω ~ 6.5535Ω (>55kW)	Model-Dependent	★	0xA206
H2-07	Induction Motor Rotor Resistance	0.001Ω ~ 65.535Ω (≤55kW) 0.0001Ω ~ 6.5535Ω (>55kW)	Model-Dependent	★	0xA207
H2-08	Induction Motor Leakage Inductance	0.01mH ~ 655.35mH (≤55kW) 0.001mH ~ 65.535mH (>55kW)	Model-Dependent	★	0xA208
H2-09	Induction Motor Mutual Inductance	0.1mH ~ 6553.5mH (≤55kW) 0.01mH ~ 655.35mH (>55kW)	Model-Dependent	★	0xA209
H2-10	Induction Motor No-Load Current	0.01A ~ H2-03 (≤55kW) 1A ~ H2-03 (>55kW)	Model-Dependent	★	0xA20A
H2-16	Synchronous Motor Stator Resistance	0.001Ω ~ 65.535Ω (≤55kW) 0.0001Ω ~ 6.5535Ω (>55kW)	Tuning Parameter	★ (E)	0xA210
H2-17	Synchronous Motor D-Axis Inductance	0.01mH ~ 655.35mH (≤55kW) 0.001mH ~ 65.535mH (>55kW)	Tuning Parameter	★ (E)	0xA211
H2-18	Synchronous Motor Q-Axis Inductance	0.01mH ~ 655.35mH (≤55kW) 0.001mH ~ 65.535mH (>55kW)	Tuning Parameter	★ (E)	0xA212
H2-20	Synchronous Motor Back-EMF	0.1V ~ 6553.5V	Tuning Parameter	★ (E)	0xA214
H2-22	Synchronous Motor No-Load Current	0% ~ 180%	5%	★ (E)	0xA216
H2-27	Encoder Line Count	1 ~ 65535	1024	★	0xA21B

Function Code	Name	Options	Default	Edit Rule	Protocol
H2-28	Encoder Type	0: ABZ Incremental Encoder 1: UVW Incremental Encoder 2: Resolver 3: Sin/Cos Encoder 4: UVW Encoder (Reduced-Wire)	0	★	0xA21C
H2-29	Speed Feedback PG Selection	0: Local PG 1: Extended PG 2: PULSE Input (DI5)	0	★	0xA21D
H2-30	ABZ Encoder AB Phase Sequence	0: Forward 1: Reverse	0	★	0xA21E
H2-31	Encoder Mounting Angle	0.0° ~ 359.9°	0.0°	★	0xA21F
H2-32	UVW Encoder UVW Phase Sequence	0: Forward 1: Reverse	0	★	0xA220
H2-33	UVW Encoder Offset Angle	0.0° ~ 359.9°	0.0°	★	0xA221
H2-34	Resolver Pole Pairs	1 ~ 65535	1	★	0xA222
H2-36	Speed Feedback PG Disconnection Detection Time	0.0s: Disabled 0.1s ~ 10.0s	0	★	0xA224
H2-37	Tuning Selection	0: No Operation 1: Induction Motor Static Tuning 2: Induction Motor Full Tuning 3: Induction Motor Static+Full Tuning 11: Synchronous Motor Static Self-Learning (E) 12: Synchronous Motor No-Load Dynamic Self-Learning (E)	0	★	0xA225
H2-38	Speed Loop Proportional Gain 1	1 ~ 100	30	☆	0xA226
H2-39	Speed Loop Integral Time 1	0.01s ~ 10.00s	0.50s	☆	0xA227
H2-40	Switching Frequency 1	0.00Hz ~ H2-43	5.00Hz	☆	0xA228
H2-41	Speed Loop Proportional Gain 2	1 ~ 100	20	☆	0xA229
H2-42	Speed Loop Integral Time 2	0.01s ~ 10.00s	1.00s	☆	0xA22A
H2-43	Switching Frequency 2	H2-40 ~ Max Frequency	10.00Hz	☆	0xA22B
H2-44	Vector Control Slip	50% ~ 200%	100%	☆	0xA22C

Function Code	Name	Options	Default	Edit Rule	Protocol
	Gain				
H2-45	Speed Loop Filter Time Constant	0.000s ~ 0.100s	0.050s	☆	0xA22D
H2-46	Vector Control Over-Excitation Gain	0 ~ 200	64	☆	0xA22E
H2-47	Torque Limit Source (Speed Control Mode)	0: H2-48 Setting 1: AI1 2: AI2 3: AI3 4: PULSE Input 5: Communication 6: MIN(AI1, AI2) 7: MAX(AI1, AI2)	0	☆	0xA22F
H2-48	Torque Limit Digital Setting (Speed Control Mode)	0.0% ~ 200.0%	150.00%	☆	0xA230
H2-51	Excitation Regulation Proportional Gain	0 ~ 20000	2000	☆	0xA233
H2-52	Excitation Regulation Integral Gain	0 ~ 20000	1300	☆	0xA234
H2-53	Torque Regulation Proportional Gain	0 ~ 20000	2000	☆	0xA235
H2-54	Torque Regulation Integral Gain	0 ~ 20000	1300	☆	0xA236
H2-55	Speed Loop Integral Attribute	Bit 0: Integral Separation 0: Disabled 1: Enabled	0	☆	0xA237
H2-61	Second Motor Control Mode	0: Open-Loop Vector 1: Closed-Loop Vector 2: V/F Control	2	★	0xA23D
H2-62	Second Motor Acceleration/ Deceleration Time Selection	0: Same as Motor 1 1: Acc/Dec Time 1 2: Acc/Dec Time 2 3: Acc/Dec Time 3 4: Acc/Dec Time 4	0	☆	0xA23E
H2-63	Second Motor Torque Boost	0.0%: Auto Torque Boost 0.1% ~ 30.0%	Model-Dependent	☆	0xA23F
H2-65	Second Motor Oscillation	0 ~ 100	Model-Depen	☆	0xA241

Function Code	Name	Options	Default	Edit Rule	Protocol
	Suppression Gain		dent		
H2-66	Field Weakening Depth	0 ~ 50	5	☆ (E)	0xA242
H2-67	Initial Position Detection Current	10% ~ 180%	80%	☆ (E)	0xA243
H2-68	Initial Position Detection Enable	0 ~ 3	1	☆ (E)	0xA244
H2-69	Speed Loop Mode Selection	0 ~ 1	0	☆ (E)	0xA245
H2-70	Saliency Ratio Adjustment Factor	50 ~ 500	100	☆ (E)	0xA246
H2-71	Maximum Torque per Ampere (MTPA) Control Enable	0 ~ 1	0	☆ (E)	0xA247
H2-72	Feedforward Compensation Mode	0 ~ 2	0	☆ (E)	0xA248
H2-73	Current Loop KP During Tuning	0 ~ 100	6	☆ (E)	0xA249
H2-74	Current Loop KI During Tuning	0 ~ 100	6	☆ (E)	0xA24A
H2-75	Z-Signal Correction Enable	0 ~ 1	1	☆ (E)	0xA24B
H2-76	Synchronous Motor SVC Speed Filter Level	10 ~ 1000	100	☆ (E)	0xA24C
H2-77	Synchronous Motor SVC Speed Estimation Proportional Gain	5 ~ 200	40	☆ (E)	0xA24D
H2-78	Synchronous Motor SVC Speed Estimation Integral Gain	5 ~ 500	30	☆ (E)	0xA24E

Function Code	Name	Options	Default	Edit Rule	Protocol
H2-79	Synchronous Motor SVC Initial Excitation Current Limit	0 ~ 150%	30%	☆ (E)	0xA24F
H2-80	Synchronous Motor SVC Minimum Carrier Frequency	0.8kHz ~ 100.0kHz	1.5kHz	☆ (E)	0xA250
H2-81	Low-Frequency Operation Mode	0 ~ 1	0	☆ (E)	0xA251
H2-82	Low-Frequency Activation Threshold	0.00Hz ~ 10.00Hz	2.00Hz	☆ (E)	0xA252
H2-83	Low-Frequency Step Size	0.0001Hz ~ 1.0000Hz	0.001Hz	☆ (E)	0xA253
H2-84	Low-Frequency Braking Current	30% ~ 120%	80%	☆ (E)	0xA254
H2-85	Synchronous Motor SVC Speed Tracking	0 ~ 1	0	☆ (E)	0xA255
H2-86	Zero Servo Enable	0 ~ 1	0	☆ (E)	0xA256
H2-87	Switching Frequency	0.00Hz ~ 655.35Hz	0.30Hz	☆ (E)	0xA257
H2-88	Zero Servo Speed Loop Proportional Gain	1 ~ 100	10	☆ (E)	0xA258
H2-89	Zero Servo Speed Loop Integral Time	0.01s ~ 10.00s	0.50s	☆ (E)	0xA259
H2-90	Rotation Lock After Stop	0 ~ 1	0	☆ (E)	0xA25A
H2-91	Stop Angle	0.0° ~ 10.0°	0.8°	☆ (E)	0xA25B
H5 Group (Analog Input Curve Settings):					
H5-00	DPWM Switching Upper Limit Frequency	0.00Hz ~ (P0-10)	8.00Hz	☆	0xA500

Function Code	Name	Options	Default	Edit Rule	Protocol
H5-01	PWM Modulation Mode	0: Asynchronous Modulation 1: Synchronous Modulation	0	☆	0xA501
H5-02	Dead-Time Compensation Mode	0: No Compensation 1: Compensation Mode 1 2: Compensation Mode 2	1	☆	0xA502
H5-03	Random PWM Depth	0: Disabled 1~10: Random PWM Depth Level	0	☆	0xA503
H5-04	Fast Current Limit Enable	0: Disabled 1: Enabled	1	☆	0xA504
H5-05	Zero-Speed Detection Threshold	0.00Hz ~ 20.00Hz	0.15Hz (Synchronous Motor)	☆	0xA505
H5-06	Undervoltage Threshold	150V ~ 420V	350V	☆	0xA506
H5-07	0Hz Output Function	0: No Output 1: Normal Output 2: DC Braking (Braking Current = P6-13)	1	☆	0xA507
H5-08	Dead-Time Adjustment	100% ~ 200%	150%	☆	0xA508
H5-09	Overvoltage Threshold	200.0V ~ 2000.0V	Model-Dependent	☆	0xA509
H6 Group: Analog Input Curve Settings					
H6-00	Analog Input 4 (AI4) Minimum Input	-10.00V ~ H6-02	0.00V	☆	0xA600
H6-01	AI4 Minimum Input Corresponding Setting	-100.0% ~ +100.0%	0.00%	☆	0xA601
H6-02	AI4 Breakpoint 1 Input	H6-00 ~ H6-04	3.00V	☆	0xA602
H6-03	AI4 Breakpoint 1 Corresponding Setting	-100.0% ~ +100.0%	30.00%	☆	0xA603
H6-04	AI4 Breakpoint 2 Input	H6-02 ~ H6-06	6.00V	☆	0xA604
H6-05	AI4 Breakpoint 2 Corresponding Setting	-100.0% ~ +100.0%	60.00%	☆	0xA605
H6-06	AI4 Maximum Input	H6-04 ~ +10.00V	10.00V	☆	0xA606

Function Code	Name	Options	Default	Edit Rule	Protocol
H6-07	AI4 Maximum Input Corresponding Setting	-100.0% ~ +100.0%	100.00%	☆	0xA607
H6-08	Analog Input 5 (AI5) Minimum Input	-10.00V ~ H6-10	-10.00V	☆	0xA608
H6-09	AI5 Minimum Input Corresponding Setting	-100.0% ~ +100.0%	-100.00%	☆	0xA609
H6-10	AI5 Breakpoint 1 Input	H6-08 ~ H6-12	-3.00V	☆	0xA60A
H6-11	AI5 Breakpoint 1 Corresponding Setting	-100.0% ~ +100.0%	-30.00%	☆	0xA60B
H6-12	AI5 Breakpoint 2 Input	H6-10 ~ H6-14	3.00V	☆	0xA60C
H6-13	AI5 Breakpoint 2 Corresponding Setting	-100.0% ~ +100.0%	30.00%	☆	0xA60D
H6-14	AI5 Maximum Input	H6-12 ~ +10.00V	10.00V	☆	0xA60E
H6-15	AI5 Maximum Input Corresponding Setting	-100.0% ~ +100.0%	100.00%	☆	0xA60F
H6-24	AI1 Setting Jump Point	-100.0% ~ 100.0%	0.00%	☆	0xA618
H6-25	AI1 Setting Jump Range	0.0% ~ 10.0%	0.50%	☆	0xA619
H6-26	AI2 Setting Jump Point	-100.0% ~ 100.0%	0.00%	☆	0xA61A
H6-27	AI2 Setting Jump Range	0.0% ~ 100.0%	0.50%	☆	0xA61B
H6-28	AI3 Setting Jump Point	-100.0% ~ 100.0%	0.00%	☆	0xA61C
H6-29	AI3 Setting Jump Range	0.0% ~ 100.0%	0.50%	☆	0xA61D
H8 Group: Point-to-Point Communication					
H8-00	Point-to-Point Communication Function	0: Disabled, 1: Enabled	0	☆	0xA800

Function Code	Name	Options	Default	Edit Rule	Protocol
	Selection				
H8-01	Master/Slave Control	0: Master, 1: Slave	0	☆	0xA801
H8-02	Master-Slave Information Interaction	Units digit: Slave command following 0: Slave does not follow master's run command 1: Slave follows master's run command Bit 10: Slave fault information transmission 0: Slave fault information not transmitted 1: Slave fault information transmitted Bit 100: Master displays slave offline 0: Master does not report fault when slave is offline 1: Master reports fault (ERR-16) when slave is offline	11	☆	0xA802
H8-03	Slave Received Data Function Selection	0: Master operating frequency, 1: Master target frequency	0	☆	0xA803
H8-04	Received Data Offset (Torque)	-100.00% to 100.00%	0%	☆	0xA804
H8-05	Received Data Gain	-10.00 to 100.00	1	★	0xA805
H8-06	Point-to-Point Communication Disconnection Detection Time	0.0s to 10.0s	0	☆	0xA806
H8-07	Point-to-Point Communication Master Data Transmission Cycle	0.001s to 10.000s	0.050s	☆	0xA807
H8-08	Frequency Received Data Offset	-100.00 to 100.00	0	☆	0xA808
H8-09	Frequency Received Data Gain	-10.00 to 10.00	1	☆	0xA809
H8-10	Slave Frequency Forward Maximum Deviation	0.00 to 100.00	10	☆	0xA80A
H8-11	Slave Frequency Reverse	0.2% to 10.00%	0.50%	☆	0xA80B

Function Code	Name	Options	Default	Edit Rule	Protocol
	Maximum Deviation				
H9 Group: Sleep/Wake Function Parameters					
H9-00	Sleep/Wake Enable	0: Disabled, 1: Controlled by PID set value and feedback, 2: Controlled by operating frequency	0	☆	0xA900
H9-01	Sleep Frequency	0.00Hz to P0-10	20.00Hz	☆	0xA901
H9-02	Sleep Delay	0.0s to 3600.0s	5.0s	☆	0xA902
H9-03	Wake-up Difference	0.0% to 100.0%	10.00%	☆	0xA903
H9-04	Wake-up Delay	0.0s to 3600.0s	3.0s	☆	0xA904
H9-05	Frequency Mode Selection During Sleep Delay	0: PID output, 1: Sleep frequency output	0	☆	0xA905
HA Group: Brake Parameters					
HA-00	Brake Control Enable Selection	0: Disabled, 1: Enabled	0	★	0xAA00
HA-01	Brake Release Frequency	0.00Hz to 20.00Hz	2.50Hz	☆	0xAA01
HA-02	Brake Release Frequency Hold Time	0.0s to 20.0s	1.0s	☆	0xAA02
HA-03	Current Limit During Braking	50.0% to 200.0%	120.00%	☆	0xAA03
HA-04	Brake Engagement Frequency	0.00Hz to 20.00Hz	1.50Hz	☆	0xAA04
HA-05	Brake Engagement Delay Time	0.0s to 20.0s	0.0s	☆	0xAA05
HA-06	Brake Engagement Frequency Hold Time	0.0s to 20.0s	1.0s	☆	0xAA06
HA-07	Brake Release Torque Current Detection Value	0.0% to 100.0%	12.00%	☆	0xAA07
HC Group: Analog Input & Output Calibration					
HC-00	AI1 Actual Voltage 1	0.500V to 4.000V	Factory calibrated	☆	0xAC00

Function Code	Name	Options	Default	Edit Rule	Protocol
HC-01	AI1 Display Voltage 1	0.500V to 4.000V	Factory calibrated	☆	0xAC01
HC-02	AI1 Actual Voltage 2	6.000V to 9.999V	Factory calibrated	☆	0xAC02
HC-03	AI1 Display Voltage 2	6.000V to 9.999V	Factory calibrated	☆	0xAC03
HC-04	AI2 Actual Voltage 1	0.500V to 4.000V	Factory calibrated	☆	0xAC04
HC-05	AI2 Display Voltage 1	0.500V to 4.000V	Factory calibrated	☆	0xAC05
HC-06	AI2 Actual Voltage 2	6.000V to 9.999V	Factory calibrated	☆	0xAC06
HC-07	AI2 Display Voltage 2	6.000V to 9.999V	Factory calibrated	☆	0xAC07
HC-08	AI3 Actual Voltage 1	-9.999V to 10.000V	Factory calibrated	☆	0xAC08
HC-09	AI3 Display Voltage 1	-9.999V to 10.000V	Factory calibrated	☆	0xAC09
HC-10	AI3 Actual Voltage 2	-9.999V to 10.000V	Factory calibrated	☆	0xAC0A
HC-11	AI3 Display Voltage 2	-9.999V to 10.000V	Factory calibrated	☆	0xAC0B
HC-12	AO1 Target Voltage 1	0.500V to 4.000V	Factory calibrated	☆	0xAC0C
HC-13	AO1 Actual Voltage 1	0.500V to 4.000V	Factory calibrated	☆	0xAC0D
HC-14	AO1 Target Voltage 2	6.000V to 9.999V	Factory calibrated	☆	0xAC0E
HC-15	AO1 Actual Voltage 2	6.000V to 9.999V	Factory calibrated	☆	0xAC0F
HC-16	AO2 Target Voltage 1	0.500V to 4.000V	Factory calibrated	☆	0xAC10
HC-17	AO2 Actual Voltage 1	0.500V to 4.000V	Factory calibrated	☆	0xAC11

Function Code	Name	Options	Default	Edit Rule	Protocol
HC-18	AO2 Target Voltage 2	6.000V to 9.999V	Factory calibrated	☆	0xAC12
HC-19	AO2 Actual Voltage 2	6.000V to 9.999V	Factory calibrated	☆	0xAC13
L0 Group: Application Macro Function Selection					
L0-00	Application Macro Selection	0: General settings, 1: Constant pressure water supply settings, 2: Grinding machine settings, 3: Machine tool settings, 7: Upper-position fixed-point parking settings	0	☆	0xB000

8.2 Monitor parameter sheet

U0 Group - Basic Monitoring Parameters			
Function Code	**Name**	**Minimum Unit**	**Communication Address**
U0-00	Operating Frequency (Hz)	0.01Hz	0x7000
U0-01	Set Frequency (Hz)	0.01Hz	0x7001
U0-02	DC Bus Voltage (V)	0.1V	0x7002
U0-03	Output Voltage (V)	1V	0x7003
U0-04	Output Current (A)	Inverter power ≤ 55.0kW: 0.01A Inverter power > 55.0kW: 0.1A	0x7004
U0-05	Output Power (kW)	0.1kW	0x7005
U0-06	Output Torque (%)	0.10%	0x7006
U0-07	DI Input Status	1	0x7007
U0-08	DO Output Status	1	0x7008
U0-09	AI1 Voltage (V)	0.01V	0x7009
U0-10	AI2 Voltage (V)	0.01V	0x700A
U0-11	AI3 Voltage (V)	0.01V	0x700B
U0-12	Counter Value	1	0x700C
U0-13	Length Value	1	0x700D
U0-14	Load Speed Display	1	0x700E
U0-15	PID Setting	1	0x700F
U0-16	PID Feedback	1	0x7010
U0-17	PLC Stage	1	0x7011
U0-18	PULSE Input Frequency (Hz)	0.01kHz	0x7012
U0-19	Feedback Speed (Unit: 0.1Hz)	0.1Hz	0x7013
U0-20	Remaining Running Time	0.1Min	0x7014
U0-21	AI1 Voltage (Pre-Calibration)	0.001V	0x7015
U0-22	AI2 Voltage (Pre-Calibration)	0.001V	0x7016
U0-23	AI3 Voltage (Pre-Calibration)	0.001V	0x7017
U0-24	Motor Speed	0–65535	0x7018
U0-25	Current Power-On Time	1Min	0x7019
U0-26	Current Running Time	0.1Min	0x701A

U0-27	PULSE Input Frequency	1Hz	0x701B
U0-28	Communication Set Value	0.01%	0x701C
U0-29	Encoder Feedback Speed (Hz)	0.01Hz	0x701D
U0-30	Main Frequency X Display (Hz)	0.01Hz	0x701E
U0-31	Auxiliary Frequency Y Display (Hz)	0.01Hz	0x701F
U0-32	AI1 Motor Temperature Value	0–200	0x7020
U0-33	AI2 Motor Temperature Value	0–200	0x7021
U0-34	Motor Temperature Value	1°C	0x7022
U0-35	Target Torque (%)	0.10%	0x7023
U0-36	Resolver Position	1	0x7024
U0-37	Power Factor Angle	0.1°	0x7025
U0-38	ABZ Position	1	0x7026
U0-39	V/F Separation Target Voltage (V)	1V	0x7027
U0-40	V/F Separation Output Voltage (V)	1V	0x7028
U0-41	DI Digital Input Terminal Status (Direct Display)	1	0x7029
U0-42	DO Input Status (Direct Display)	1	0x702A
U0-43	DI Digital Input Terminal Function Status (Functions 01–40)	1	0x702B
U0-44	DI Digital Input Terminal Function Status (Functions 41–80)	1	0x702C
U0-45	Fault Information	1	0x702D
U0-59	Set Frequency (%)	0.01%	0x703B
U0-60	Operating Frequency (%)	0.01%	0x703C
U0-61	Drive Status	1	0x703D
U0-62	Current Fault	1	0x703E

Chapter 9. Parameters Explanation

P0 Group Basic function group

P0-00	GP Type Display		Default value	Model-related
	Setting range	1	G Model (Constant Torque Load Model)	
		2	P Model (Fan and Pump Load Models)	

This parameter is for the user to view the factory model only and cannot be changed.

1:For constant torque loads with specified rated parameters

2:For variable torque loads with specified rated parameters (fan, pump loads)

P0-01	Motor 1 control mode		Default value	2
	Setting range	0	Sensorless Vector Control (SVC)	
		1	Closed-Loop Vector Control (FVC)	
		2	V/F Control	

0: Sensorless Vector Control (SVC)

Refers to open-loop vector control, suitable for general high-performance applications. One drive can only control one motor. Typical applications include machine tools, centrifuges, wire drawing machines, injection molding machines, and similar loads.

1: Flux Vector Control with Speed Sensor (Closed-Loop)

Refers to closed-loop vector control. The motor must be equipped with an encoder, and the drive must be configured with a PG card matching the encoder type. Suitable for high-precision speed or torque control applications. One drive can only control one motor. Typical applications include high-speed papermaking machinery, hoisting equipment, elevators, and similar loads.

2: V/F Control (FVC)

Suitable for applications with low load requirements or where one drive controls multiple motors, such as fans and pumps.

Note:

When selecting vector control mode, the motor parameter identification process must be performed. Only accurate motor parameters can fully utilize the advantages of vector control.

Adjusting the speed regulator parameters (P2 group for the primary motor, H2 group for the secondary motor) can further optimize performance.

For permanent magnet synchronous motors (PMSM), flux vector control with a speed sensor is typically recommended. Some low-power applications may use V/F control, but sensorless vector control is not supported for PMSM.

P0-02	Command Source		Default value	0
	Setting range	0	Keypad (LED off)	
		1	Terminal (LED on)	
		2	Communication (LED blink)	

Selecting the Input Channel for Drive Control Commands

Drive control commands include: Start, Stop, Forward, Reverse, and Jog.

0: Operator Panel Command Channel

Control commands are issued via the RUN and STOP/RESET keys on the operator panel.

1: Terminal Command Channel

Control commands are issued via multifunction input terminals, such as FWD (Forward), REV (Reverse), JOGF (Jog Forward), and JOGR (Jog Reverse).

2: Communication Command Channel Control commands are sent from a host controller via communication, supporting Modbus protocol.

This series of drives comes with a non-isolated RS485 communication interface on the control board. For short-distance communication or low-interference environments, this built-in interface can be used directly.

For long-distance communication or high-interference environments, an optional Modbus communication card must be installed.

Control commands are written via address 0x2000. For command definitions, refer to Appendix I: Communication Address Definitions.

P0-03	Main Frequency Source (X)		default value	1
	setting range	0	Digital Preset (set by P0-08, UP and DOWN to adjust, non-volatile)	
		1	Digital Preset (set by P0-08, UP and DOWN to adjust, volatile)	
		2	AI1	
		3	AI2	
		4	AI3(Keyboard Potentiometer)	
		5	High-Speed Pulse (DI5)	
		6	Multi-step Command	
		7	PLC	
		8	PID	
		9	Communication	

		10	Optic Multi-Speed

Selecting the Drive's Main Frequency Reference Input Channel

There are 10 available frequency reference sources:

0: Digital Setting (Non-volatile)

Initial frequency is set to P0-08 "Preset Frequency" value

Can be modified using ▲/▼ keys on keypad or UP/DOWN multi-function input terminals

After power cycle, frequency reverts to P0-08 "Digital Preset Frequency" value

1: Digital Setting (Volatile Memory)

Initial frequency is set to P0-08 "Preset Frequency" value

Modifications via ▲/▼ keys or UP/DOWN terminals are retained after power cycle

Note: P0-23 "Digital Frequency Stop Memory Selection" determines whether frequency adjustments are memorized or cleared when stopping (not related to power loss)

2: AI1

3: AI2

4: AI3 (Keypad Potentiometer)

Frequency determined by analog inputs:

AI1: 0-10V voltage input

AI2: 0-10V voltage or 4-20mA current (selected by J8 jumper)

AI3: Keypad potentiometer input

A(E) series provides 5 mapping curves (3 linear 2-point, 2 programmable 4-point)

Configure via P4-13~P4-27 and H6 parameter groups

P4-33 selects mapping curve for each analog input

100% input corresponds to P0-10 "Maximum Frequency"

5: Pulse Input (DI5)

Frequency reference via high-speed pulse input on DI5 terminal

Specifications: 9-30V, 0-100kHz

Configure linear mapping via P4-28~P4-31

100% pulse frequency corresponds to P0-10 "Maximum Frequency"

6: Multi-step Command

Frequency selected by digital input combinations (up to 4 DI terminals)

16 possible states correspond to 16 preset frequencies (percentage of P0-10)

Configure via PC parameter group

7: Simple PLC

Frequency cycles through 1-16 programmable values

Configurable dwell time and acceleration/deceleration for each step

See PC parameter group for details

8: PID

Frequency determined by process PID controller output

Used for closed-loop applications (pressure, tension control, etc.)

Configure PA "PID Function" parameter group

9: Communication

Frequency reference via communication interface

10: Optoelectronic Multi-speed

Frequency determined by optoelectronic multi-speed input

Related to PC-00, PC-01, PC-02 parameters。

P0-04	Aux Frequency Source (Y)		default value	0
	setting range	0	Digital Preset (set by P0-08, UP and DOWN to adjust, non-volatile)	
		1	Digital Preset (set by P0-08, UP and DOWN to adjust, volatile)	
		2	AI1	
		3	AI2	
		4	AI3(Keyboard Potentiometer)	
		5	High-Speed Pulse (DI5)	
		6	Multi-step Command	
		7	PLC	
		8	PID	
		9	Communication	
		10	Optic Multi-Speed	

Auxiliary Frequency Reference Usage

When the auxiliary frequency source (Y) is used as an independent frequency reference channel (i.e., when the frequency source is set to X-to-Y switching), its operation is identical to that of the main frequency source (X). For usage details, refer to the description of P0-03.

When the auxiliary frequency source (Y) is used for superimposed reference (i.e., the final frequency is determined by combining the main frequency source (X) and auxiliary frequency source (Y)), note the following:

If the auxiliary frequency source is set to digital input:

The preset frequency (P0-08) does not take effect.

Frequency adjustments made via the ▲/▼ keys (or UP/DOWN multifunction input terminals) directly modify the frequency on top of the main reference.

If the auxiliary frequency source is set to analog input (AI1, AI2, AI3) or pulse input:

The 100% input value corresponds to the auxiliary frequency range, configurable via P0-05 and P0-06.

(For pulse input, the behavior is similar to analog input.)

Important Note:

The auxiliary frequency source (Y) and main frequency source (X) must not be set to the same channel.

Avoid setting P0-03 and P0-04 to the same value, as this may cause operational conflicts.

P0-05	Aux Frequency Range		default value	0
	setting range	0	Relative to Max Frequency	
		1	Relative to Source X	
P0-06	Aux Frequency Range (Y)		default value	0
	setting range		0.0%~300.0%	

When the frequency source is set to "Frequency Summation", these two parameters are used to define the adjustment range of the auxiliary frequency source.

P0-05 determines the reference for the auxiliary frequency source range. It can be set relative to either the Maximum Frequency or the primary frequency source (X). If configured relative to the primary frequency source, the range of the auxiliary frequency source will dynamically adjust based on changes in the primary frequency (X).

P0-07	Frequency Source Combination		default value	0
	setting range	Bit 0	Frequency Source Selection	
		0	Main X	
		1	X+Y Calculation	
		2	X/Y Switch	
		3	X/Calc Switch	
		4	Y/Calc Switch	
		Bit 10	Operational Relationship between Frequency SourceX and Y	
		0	X+Y	
		1	X-Y	
		2	Max(X,Y)	
		3	Min(X,Y)	

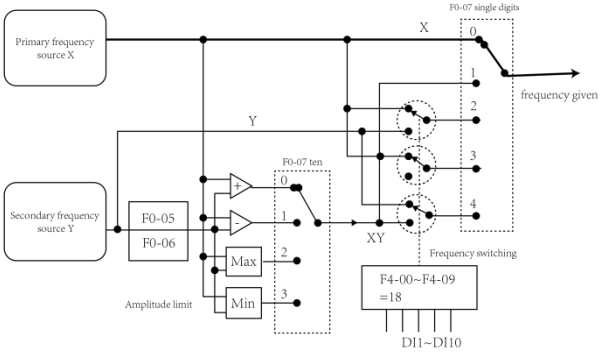

This parameter selects the frequency reference channel, which combines the primary frequency source (X) and auxiliary frequency source (Y) to determine the frequency command.

When the frequency source is set to "Primary-Auxiliary Calculation", a bias frequency can be configured via P0-21. This bias frequency is superimposed on the calculated result of the primary and auxiliary sources, providing flexible adaptation to various application requirements.

P0-08	Preset Frequency	default value	50Hz
	setting range	0.00Hz~Max Freq (P0-10)	

When the frequency source is set to "Digital Setting" or "Terminal UP/DOWN", this function code value serves as the initial digital frequency setting for the drive.

P0-09	Rotation Direction	default value	0
	setting range	0	Forward
		1	Reverse

This function code allows changing the motor rotation direction without physically swapping any motor leads (U, V, W). It electronically emulates the effect of interchanging any two power cables to reverse the motor's rotational direction.

Important Notes:

1.The motor rotation direction will revert to its original state after parameter initialization.

2.Exercise extreme caution when modifying this setting in systems where motor rotation direction must remain fixed after commissioning.

P0-10	Maximum Frequency	default value	50Hz
	setting range	50.00Hz~500.0Hz	

When pulse input (DI5), multi-step commands, or other sources are selected as frequency references, their 100.0% values are all scaled relative to parameter P0-10.

To accommodate both frequency command resolution and input range requirements (with a maximum frequency of 500Hz), the number of decimal places for the frequency command can be configured via parameter P0-22.

P0-11	Upper Limit Source		default value	0
	Setting frequency	0	P0-12	
		1	AI1	
		2	AI2	
		3	AI3	
		4	PULSE (DI5)	
		5	Communication	

The upper limit frequency can be sourced from:

Digital setting (P0-12)

Analog inputs (AI1, AI2, AI3)

PULSE setting (DI5)

Communication reference

Configuration Notes:

1.When using analog inputs (AI1-AI3), PULSE input (DI5), or communication reference, the setting method follows the same principle as the primary frequency source (refer to P0-03 description).

2.Application Example - Winding Control:

In torque control mode for winding applications:

Analog-set upper frequency prevents "runaway" scenarios during material breakage

Upon reaching the upper limit, the drive maintains operation at the defined maximum frequency

P0-12	Upper Limit Frequency	default value	50HZ
	setting range	Lower Limit (P0-14)~Max Freq (P0-10)	

set upper limit frequency，setting range P0-14~P0-10

P0-13	Upper Limit Offset	default value	50HZ
	setting range	0.00Hz~max freqP0-12	

When the upper frequency limit source is set to analog input or PULSE setting, P0-13 serves as an offset value that is superimposed on the upper frequency limit set in P0-11 to determine the final upper frequency limit value.

P0-14	Lower Limit Frequency	default value	50Hz
	setting range	0.00Hz~Upper LimitP0-12	

When the frequency command is lower than the lower limit frequency set by P0-14, the drive can either stop, operate at the lower limit frequency, or run at zero speed. The operating mode to be adopted can be configured via P8-14 (Operation Mode When Set Frequency is Below Lower Limit Frequency).

P0-15	Carrier Frequency	default value	Model-dep
	setting range	0.5KHZ~16.0KHZ	

This function adjusts the drive's carrier frequency. By modifying the carrier frequency, it can reduce motor noise, avoid resonance points in the mechanical system, decrease line-to-ground leakage current, and minimize interference generated by the drive.

When the carrier frequency is set lower:

The higher harmonic components of the output current increase.

Motor losses rise, leading to higher motor temperature.

When the carrier frequency is set higher:

Motor losses decrease, reducing motor temperature.

However, drive losses increase, raising drive temperature and increasing interference.

Adjusting the carrier frequency affects the following performance aspects:

Carrier Frequency	Low	→	High
Motor noise	High	→	low
Output Current Pattern	poor	→	Good
Motor temperature rise	High	→	Low
Drive temperature rise	Low	→	High
Current leakage	Low	→	high
External Radiation Interference	low	→	high

The factory default carrier frequency settings vary depending on the drive's power rating. Although users can modify these settings as needed, note that setting the carrier frequency higher than the default value will increase heat dissipation in the drive's heatsink. In such cases, the drive must be derated; otherwise, it may trigger an overheating alarm.

P0-16	Carrier Temp. Adjustment	default value	1

	setting range	0: Disable 1: Enable

Carrier frequency temperature adjustment refers to the drive automatically reducing its carrier frequency when detecting high heatsink temperatures, thereby lowering thermal rise. As the heatsink cools, the carrier frequency gradually returns to the set value. This function helps minimize drive overheating alarms.

P0-17	Acceleration Time 1	default value	Model-dep
	setting range	0.00s~650.00s(P0-19=2) 0.0s~6500.0s(P0-19=1) 0s~65000s(P0-19=0)	
P0-18	Deceleration Time 1	default value	Model-dep
	setting range	0.00s~650.00s(P0-19=2) 0.0s~6500.0s(P0-19=1) 0s~65000s(P0-19=0)	

Acceleration time refers to the time required for the drive to accelerate from zero frequency to the acceleration/deceleration reference frequency (determined by P0-25), as shown by t1 in the diagram below.

Deceleration time refers to the time required for the drive to decelerate from the acceleration/deceleration reference frequency (determined by P0-25) to zero frequency, as shown by t2 in the diagram below.

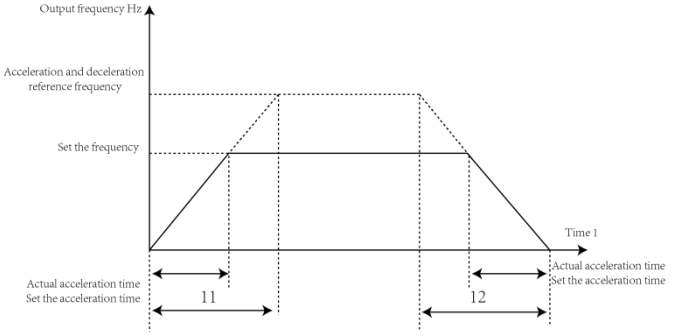

Accel/Decel Time Time diagram

The drive provides four configurable acceleration/deceleration time groups. Users can switch between these groups via DI (Digital Input) terminal selection. Each group is defined by the following function codes:

Group 1: P0-17 (Acceleration time), P0-18 (Deceleration time)

Group 2: P8-03 (Acceleration time), P8-04 (Deceleration time)

Group 3: P8-05 (Acceleration time), P8-06 (Deceleration time)

Group 4: P8-07 (Acceleration time), P8-08 (Deceleration time)

P0-19	Accel/Decel Time Unit	default value	1
	0	1s	
	1	0.1s	
	2	0.01s	

To accommodate diverse application requirements, three selectable time units are provided: 1.0 sec (Base unit), 0.1 sec, 0.01 sec.

Important Note:

When modifying this parameter, note that:

1.The decimal point display format will change for all four acceleration/deceleration time groups

2.The actual acceleration/deceleration times will be scaled accordingly

3.Special attention is required during implementation to ensure proper operation

P0-21	Aux Frequency Offset	default value	1
	setting range	0.00Hz~Max FreqP0-10	

This function code is only effective when the frequency source is set to primary/secondary calculation mode, where P0-21 serves as a bias frequency that combines with the primary/secondary calculation result to form the final frequency reference, enabling more flexible frequency setting.

P0-22	Frequency Command Resolution		default value	2
	setting range	2	0.01Hz	

This function is to confirm the resolution of all frequency related function code.

P0-23	Digital Freq. Memory		default value	1
	setting range	0	Don't Remember	
		1	Remember	

This function is only valid when the frequency source is set to digital reference.

"Non-memory" mode: After drive shutdown, the digital frequency reference reverts to P0-08 (preset frequency), and any adjustments made via ▲/▼ keys or Terminal UP/DOWN are cleared.

"Memory" mode: The drive retains the last-set digital frequency reference before shutdown, reserving all ▲/▼ key or Terminal UP/DOWN adjustments.

P0-24	Motor Selection		default value	0
	setting	0	Motor 1	

	range	1	Motor 2

The drive supports time-shared operation of two motors with independent configurations:

Separate nameplate parameter settings, Individual motor tuning, Different control modes selectable, Independent performance parameter adjustment.

Parameter Group Mapping:

1.Motor 1: P1/P2 parameter groups; 2.Motor 2: H2 parameter group

Selection Method:

1.Choose active motor group via: P0-24 function code; DI terminal input

2.DI terminal selection takes priority if conflicts occur

P0-25	Accel/Decel Time Base Frequency		default value	0
	setting range	0	Maximum Frequency (P0-10)	
		1	Set Frequency	
		2	100Hz	

Acceleration/Deceleration Time refers to the duration required for the drive to transition between zero speed and the frequency set in P0-25 (see diagram below).

Note: When P0-25 is set to 1:

• The acceleration/deceleration time becomes frequency-dependent

• Motor acceleration will vary if the target frequency changes frequently

• Special attention is required during application

P0-26	Reference for UP/DOWN During Operation		default value	0
	setting range	0	Running Frequency	
		1	Set Frequency	

This parameter is only effective when the frequency source is set to digital reference mode.It determines how the ▲/▼ keys or Terminal UP/DOWN commands adjust the target frequency:

Option 0: Modifies based on the running frequency (real-time changes during acceleration/deceleration)

Option 1: Modifies based on the set frequency (original reference value)

Key Difference:

The setting significantly impacts behavior during acceleration/deceleration, particularly when the running frequency differs from the set frequency.

P0-27	Command Source Binding Frequency Source	default value	000

	setting range	Bit0:	Operation Panel Command Binding Frequency Source Selection
		0	No Binding
		1	Digital Set Frequency
		2	AI1
		3	AI2
		4	AI3
		5	PULSE Pulse Setting (DI5)
		6	Multi-Speed
		7	Simple PLC
		8	PID
		9	Communication Given
		Bit 10	Terminal Command Binding Frequency Source Selection
		Bit 100	Communication Command Binding Frequency Source Selection

This function defines bundled combinations between 3 command channels and 9 frequency reference channels for synchronous switching.

Key Features:

1.Frequency Reference Channels match the definitions in P0-03 (Main Frequency Source X)

2.Flexible Binding - Multiple command channels can share the same frequency reference channel

3.Priority Override - When a command source with bound frequency is active: Temporarily overrides P0-03~P0-07 frequency sources. Original settings resume after command deactivation

P0-28	Communication Expansion Card Type		default value	0
	setting range	0	Modbus Communication Card	
		1	1: Profibus-DP、CANopen、Profinet、EtherCAT protocol	

P1 Group First Motor Parameters

P1-00	Motor Type Selection		default value	0
	setting range	0	Standard Asynchronous Motor	
		1	Variable Frequency Asynchronous Motor	
		2	Permanent Magnet Synchronous Motor	
P1-01	Rated power		default value	Model-dep
	setting range		0.1kW~1000.0kW	

P1-02	Rated voltage	default value	Model-dep
	setting range	1V~2000V	
P1-03	Rated capacity	default value	Model-dep
	setting range	0.01A~655.35A(Inverter Power<=55kW) 0.1A~6553.5A(Inverter Power>55kW)	
P1-04	Rated capacity	default value	Model-dep
	setting range	0.01Hz~Maximum Frequency	
P1-05	Rated rotating speed	default value	Model-dep
	setting range	1rpm~65535rpm	

These function codes specify essential motor nameplate data required for both V/F control and vector control operation.

For optimal V/F vector control performance, motor parameter tuning is required - the accuracy of tuning results directly depends on proper nameplate parameter configuration.

P1-06	Asynchronous Motor Stator Resistance	default value	Model-dep
	setting range	0.001Ω~65.535Ω (Inverter Power <=55kW) 0.0001Ω~6.5535Ω (Inverter Power >55kW)	
P1-07	Asynchronous Motor Rotor Resistance	default value	Model-dep
	setting range	0.001Ω~65.535Ω (Inverter Power <=55kW) 0.0001Ω~6.5535Ω (Inverter Power >55kW)	
P1-08	Asynchronous Motor Leakage Inductance	default value	Model-dep
	setting range	0.01mH~655.35mH (Inverter Power <=55kW) 0.001mH~65.535mH (Inverter Power >55kW)	
P1-09	Asynchronous Motor Mutual Inductance	default value	Model-dep
	setting range	0.1mH~6553.5mH (Inverter Power <=55kW) 0.01mH~655.35mH (Inverter Power >55kW)	
P1-10	Asynchronous Motor No-Load Current	default value	Model-dep
	setting range	0.01A~P1-03 (Inverter Power <=55kW) 0.1A~P1-03 (Inverter Power >55kW)	

Parameters P1-06 to P1-10 are for the asynchronous motor. These parameters are generally not listed on the motor nameplate and must be obtained through drive auto-tuning. Among them,Asynchronous Motor Stationary Tuning' can only acquire three parameters (P1-06 to P1-08),

while synchronous Motor Complete Tuning' can obtain all five parameters here, as well as additional data such as encoder phase sequence and current loop PI parameters.

When changing the motor rated power (P1-01) or motor rated voltage (P1-02), the drive will automatically modify the values of P1-06 to P1-10, resetting these five parameters to the default values commonly used for standard Y-series motors.

P1-16	Synchronous Motor Stator Resistance	default value	Model-dep
	setting range	0.001Ω~65.535Ω (Drive Power <=55kW) 0.0001Ω~6.5535Ω (Drive Power >55kW)	
P1-17	Synchronous Motor D-Axis Inductance	default value	Model-dep
	setting range	0.01mH~655.35mH (Drive Power <=55kW) 0.001mH~65.535mH (Drive Power >55kW)	
P1-18	Synchronous Motor Q-Axis Inductance	default value	Model-dep
	setting range	0.01mH~655.35mH(inverter power≤55kW) 0.001mH~65.535mH(inverter powe>55kW)	
P1-20	Synchronous Motor Back EMF	default value	Model-dep
	setting range	0.1mH~6553.5mH(inverter powe≤55kW) 0.01mH~655.35mH(inverter powe>55kW)	
P1-22	Synchronous Motor No-Load Current	default value	5%
	setting range	0.01A ~F1-03(inverter powe≤55kW) 0.1A ~F1-03(inverter powe>55kW)	

Parameters P1-16 to P1-22 are synchronous motor parameters. These parameters are generally not marked on the motor nameplate and must be obtained through drive auto-tuning. Among them, "Synchronous Motor Dynamic Tuning" can acquire not only the four parameters P1-16 to P1-20 but also additional data including encoder phase sequence and current loop PI parameters.

If on-site tuning cannot be performed for the asynchronous motor, the corresponding parameters provided by the motor manufacturer can be manually entered into the above-mentioned Function codes.

P1-27	Encoder Pulse Count	default value	1024
	setting range	1~65535	

Set the number of pulses per revolution for ABZ or UVW incremental encoders. In the vector control mode with speed sensor, the encoder pulse number must be correctly configured; otherwise, the motor will not operate properly.

P1-28	Encoder Type		default value	0
	setting range	0	ABZ Incremental Encoder	
		1	UVW Incremental Encoder	
		2	Resolver	
		3	Sine-Cosine Encoder	
		4	Wire-Saving UVW Encoder	

The system supports multiple encoder types, and different encoders require matching PG cards. Please select the correct PG card for your application. Among them, synchronous motors can optionally use any one of these five encoder types, while asynchronous motors typically only use ABZ incremental encoders or resolvers.

After installing the PG card, parameter P1-28 must be properly configured according to the actual conditions; otherwise, the drive may not operate correctly.

P1-30	ABZ Incremental Encoder AB Phase Sequence		default value	0
	setting range	1	Forward	
		2	Reverse	

This Function code is only valid for ABZ incremental encoders (i.e., effective exclusively when P1-28=0). It sets the phase sequence of the AB signals for ABZ incremental encoders.

The Function code applies to both asynchronous and synchronous motors. During asynchronous motor complete tuning or synchronous motor no-load tuning, the AB phase sequence of the ABZ encoder can be automatically acquired.

P1-31	Encoder Installation Angle	default value	1024
	setting range	0.0°~359.9°	

This parameter is only valid for synchronous motor control and applies to ABZ incremental encoders, UVW incremental encoders, resolvers, and UVW encoders with line-saving configuration, but is ineffective for sine/cosine encoders.

The parameter can be obtained during either no-load tuning or load tuning of synchronous motors. As it is critical for synchronous motor operation, tuning must be performed after initial installation to ensure proper functioning.

P1-32	UVW Encoder UVW Phase Sequence		default value	0
	setting range	0	Forward	
		1	Reverse	

P1-33	UVW Encoder Offset Angle	default value	0.0°
	setting range	0.0°~359.9°	

These two parameters are only effective for synchronous motors with UVW encoders.

The parameters can be obtained during both no-load tuning and load tuning of synchronous motors. Critical for proper motor operation, these parameters require mandatory tuning after initial installation to ensure normal functioning.

P1-34	Resolver Pole Pairs	default value	1
	setting range	1~6553.5	

Resolvers have pole pairs. When using this type of encoder, the pole pair parameter must be correctly set.

P1-36	Speed Feedback PG Disconnection Detection Time	default value	0.0s
	setting range	0.0s：No Action 0.1s~10.0s	

Function: Sets the detection time for encoder wire-break faults. When set to 0.0s, the drive does not detect encoder wire-break faults.

Fault Response: If the drive detects a wire-break fault and the duration exceeds the time set in P1-36, it will trigger an ERR20 alarm.

P1-37	Tuning Selection		default value	0
	setting range	0	No Operation	
		1	Asynchronous Motor Static Tuning	
		2	Asynchronous Motor Complete Tuning	
		3	Asynchronous Motor Static Complete Tuning	
		11	synchronous Motor Static Self-Learning (E)	
		12	Synchronous Motor No-Load Dynamic Self-Learning (E)	

Tuning Mode Selection (Function Code Settings)

0: No Operation：Tuning is disabled.

1: Asynchronous Motor Stationary Tuning. Applicable when the motor cannot be disconnected from the load (full tuning not possible).

Preconditions: Correctly set motor type and nameplate parameters (P1-00~P1-05).

Result: The drive obtains P1-06~P1-08 (3 parameters).

Procedure: Set Function Code to 1, then press RUN.

2: Asynchronous Motor Complete Tuning. For optimal dynamic control performance. Motor must be unloaded.

Process: Performs stationary tuning first. Accelerates to 80% of rated frequency (accel time P0-17). Holds speed, then decelerates (decel time P0-18) to stop.

Preconditions: Set motor type, nameplate parameters (P1-00~P1-05), encoder type, and pulse count (P1-27, P1-28).

Result: Obtains P1-06~P1-10 (5 parameters), AB phase sequence (P1-30), and current loop PI gains (P2-13~P2-16).

Procedure: Set Function Code to 2, then press RUN.

3: Static Full Parameter Identification (Encoderless). Full self-learning with motor stationary (minor vibration may occur).

Preconditions: Set motor type and nameplate parameters (P1-00~P1-05).

Result: Obtains P1-06~P1-10 (5 parameters).

Process: Similar to Mode 2 (accel/decel via P0-17/P0-18).

11: Synchronous Motor Static Self-Learning

Preconditions: Set motor type and nameplate parameters (P1-00~P1-05).

Result: Obtains P1-16~P1-18 (3 parameters).

Procedure: Set Function Code to 11, then press RUN.

12: Synchronous Motor No-Load Dynamic Tuning. Motor must be unloaded.

Preconditions: Set motor type and nameplate parameters (P1-00~P1-05).

Result: Obtains P1-16~P1-18, P1-20 (4 parameters).

Procedure: Set Function Code to 12, then press RUN.

Important Notes:

Tuning only works in keypad mode (disabled in Terminal/communication modes).

All acceleration/deceleration times follow P0-17/P0-18 settings.

P2 Group: Vector Control Parameters

The P2 group Function codes only apply to vector control and are invalid for V/F control.

P2-00	Speed Loop Proportional Gain 1	default value	30（synchronous Motor：20）
	setting range	1~ 100	
P2-01	Speed Loop Integral Time 1	default value	0.50s
	setting range	0.01s~ 10.00s	
P2-02	Switching Frequency 1	default value	5.00Hz
	setting range	0.00~P2-05	

P2-03	Speed Loop Proportional Gain 2	default value	20（synchronous Motor： 10）
	setting range	0~ 100	
P2-04	Speed Loop Integral Time 2	default value	1.00s
	setting range	0.01s~ 10~00s	
P2-05	Switching Frequency 2	default value	10.00Hz
	setting range	P2-02 ~ Maximum Frequency	

When output frequency < Switch Freq. 1 (P2-02):

Speed loop PI gains: P2-00 (Proportional) & P2-01 (Integral)

When output frequency > Switch Freq. 2 (P2-05):

Speed loop PI gains: P2-03 (Proportional) & P2-04 (Integral)

During transition (Switch Freq. 1 ≤ frequency ≤ Switch Freq. 2):

PI parameters linearly interpolate between the two sets (see diagram below).：

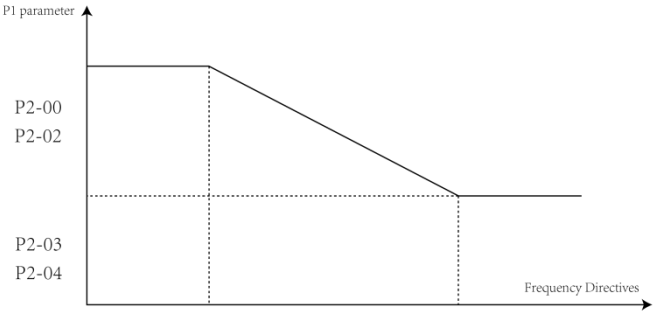

speed loop integral and PI parameter scale relation diagram

Integral Time Adjustment

The integral time (P2-01/P2-04) regulates the speed dynamic response in vector control.

To accelerate response: ↑ Proportional gain (P2-00/P2-03), ↓ Integral time

Risk of instability: Excessive proportional gain or overly small integral time may cause system oscillation.

Recommended Tuning Method: Start from default values.

First, increase proportional gain until oscillation just avoids occurring. Then, reduce integral time to achieve fast response and minimal overshoot.

Warning:

Improper PI settings may lead to excessive speed overshoot or overvoltage faults during overshoot recovery.

P2-06	Vector Control Slip	default value	100%

	Gain		
	setting range	50%~200%	

For Sensorless Vector Control, this parameter adjusts the motor's steady-state speed accuracy. If speed drops under load: Increase the parameter value. If speed rises under load: Decrease the parameter value.

For Encoder-Based Vector Control, this parameter regulates the drive's output current under the same load condition.

P2-07	Speed Loop Filter Time Constant	default value	0.050s
	setting range	0.000s~0.100s	

In vector control mode, the speed regulator outputs a torque current command, and this parameter serves to filter the torque command. Typically, no adjustment is needed, but the filtering time should be appropriately increased if significant speed fluctuations occur or decreased if motor oscillation is observed. A smaller speed loop filter time constant results in faster speed response but may cause higher torque ripple, while a larger value produces smoother torque output at the expense of slower speed response.

P2-09	Torque Upper Limit Command Selection in Speed Control Mode	default value	0
	setting range	0: Parameter P2-10 Setting 1: AI1 2: AI2 3: AI3 4: Pulse (DI5) 5: Communication Given 6: MIN(AI1,AI2) 7: MAX(AI1,AI2) Full scale of options 1-7 corresponds to P2-10	
P2-10	Torque Upper Limit Digital Setting in Speed Control Mode	default value	150.0%
	setting range	0.0%~200.0%	

P2-10 sets the drive's motoring torque limit, activated when the motor's rotation direction matches the torque direction (otherwise braking torque applies). For applications requiring separate motoring/braking torque limits (e.g. cam mechanisms with cyclical load reversals), use P2-11 (motoring) and P2-12 (braking) – e.g. reducing P2-12's braking torque limit suppresses DC bus voltage rise without compromising load-driving capability.

P2-11	Torque Upper Limit Command Selection in Speed Control Mode (Generation)	default value	0

	setting range	0: Parameter P2-12 Setting 1: AI1 2: AI2 3: AI3 4: PULSE Pulse Setting 5: Communication Given 6: MIN(AI1,AI2) 7: MAX(AI1,AI2) 8: Parameter P2-12 Setting Full scale of options 1-7 corresponds to P2-12	
P2-12	Torque Upper Limit Digital Setting in Speed Control Mode (Generation)	default value	150 .0%
	setting range	0.0%~200.0%	

P2-12 is used to set the upper limit of the generator torque for the inverter. When the actual rotation direction of the motor is the same as the torque direction, it operates in motoring mode; otherwise, it operates in braking mode.

In applications where separate settings for motoring torque and braking torque are required, P2-11 and P2-12 can be configured independently. For example, in cam load applications, where motoring and braking states alternate periodically, appropriately reducing the braking torque upper limit (P2-12) can effectively suppress the rise in the inverter DC bus voltage without affecting the normal operation of driving the load.

P2-13	Excitation Regulation Proportional Gain	default value	2000
	setting range	0 ~ 60000	
P2-14	Excitation Regulation Integral Gain	default value	1300
	setting range	0 ~ 60000	
P2-15	Torque Regulation Proportional Gain	default value	2000
	setting range	0 ~ 60000	
P2-16	Torque Regulation Integral Gain	default value	1300
	setting range	0 ~ 60000	

For the PI (Proportional-Integral) regulation parameters of the current loop in vector control, these parameters are typically automatically obtained after a complete motor tuning process and generally do not require modification. The integral regulator in the current loop does not use the integral time as its unit of measurement; instead, the integral gain is set directly. If the PI gains of the current loop are set too high, it may lead to oscillations in the entire control loop. Therefore, when current oscillations or significant torque fluctuations occur, the PI proportional gain or integral gain in this part can be manually reduced.

P2-17	Speed Loop Integral Property	default value	0
	setting range	0: Valid 1: Invalid	

0: Integral action is effective during acceleration and deceleration processes, enabling fast response in rapid acceleration scenarios, but it may lead to speed overshoot.

1: Integral separation occurs during acceleration and deceleration processes. In rapid acceleration scenarios, it can effectively reduce speed overshoot, but the response speed will slow down.

P2-18	Synchronous Motor Flux-Weakening Mode	default value	1
	setting range	0: Field Weakening Frequency Adjustment 1: Auto-tuning 2: Feedforward + Auto-tuning	
P2-19	Synchronous Motor Flux-Weakening Coefficient	default value	5
	setting range	1~50	
P2-23	Synchronous Motor Output Voltage Saturation Margin	default value	5%
	setting range	1%~50%	

This parameter is set for the field-weakening mode of a synchronous motor, allowing different field-weakening modes to be selected based on operating conditions.

P2-18=0: No field-weakening

The synchronous motor does not undergo field-weakening control. In this case, the maximum speed the motor can reach is related to the inverter's DC bus voltage. The advantage is that there is no field-weakening current, resulting in a smaller output current. However, the operating frequency cannot reach the set frequency. If the customer wishes to achieve a higher speed, the field-weakening function needs to be enabled.

P2-18=1: Automatic adjustment mode

This field-weakening method is simple and reliable. After entering the field-weakening region, the higher the speed, the greater the field-weakening current. In scenarios requiring rapid field-weakening, the synchronous motor's field-weakening coefficient P2-19 can be appropriately increased. However, if P2-19 is set too high, it may cause current instability.

P2-18=2: Combined calculation and automatic adjustment mode

The field-weakening current adjustment speed in the combined calculation and automatic adjustment mode is relatively fast. This mode can be set in scenarios where automatic adjustment

alone cannot meet the requirements. However, this mode relies on accurate motor parameter values.

P2-20	Overmodulation Voltage Coefficient	default value	105%
	setting range	100%~110%	

The maximum output voltage coefficient represents the inverter's capability to increase its maximum output voltage. Increasing the value of P2-20 can enhance the motor's maximum load-carrying capacity in the field-weakening region, but it also increases the motor current ripple, leading to greater motor heating. Conversely, decreasing the value of P2-20 will reduce the motor's maximum load-carrying capacity in the field-weakening region, but it will decrease the motor current ripple and alleviate motor heating. Generally, there is no need to adjust this parameter.

P2-21	Constant Power Zone Torque Coefficient	default value	100%
	setting range	50%~200%	

This parameter only takes effect when the motor operates above its rated frequency. When the motor needs to rapidly accelerate to a speed more than twice its rated frequency and experiences a long actual acceleration time, it is appropriate to decrease the value of P2-21. Conversely, when the motor experiences a significant drop in speed after being loaded while operating at twice its rated frequency, it is appropriate to increase the value of P2-21. Generally, there is no need to change this parameter.

P2-22	Power Generation Limiting Enable	default value	0
	setting range	0~1	

When P2-22 is set to 1, the generation torque limit (P2-12) and the source of the generation torque limit (P2-11) become effective. In the default state, there is no distinction between generation and motoring torques, and their upper limits are both set by P2-10. After entering the field-weakening region, if a higher output voltage is desired to reduce the field-weakening current, the synchronous machine's output voltage saturation margin (P2-23) can be appropriately decreased. However, if P2-23 is set too small, the output voltage will be more prone to saturation, thereby affecting the control performance.

P2-24	Initial Position Detection Current	default value	10%~180%
	setting range	80%	
P2-25	Initial Position Detection Enable	default value	1

	setting range	0: No detection 1: Detect on every run 2: Detect on first run after power-on 3: Detect + reverse angle check on every run

Initial position angle detection is generally used for SVC (Sensorless Vector Control). Its advantage is that it prevents reverse rotation during startup. However, a drawback is that it may produce some noise during startup. For applications where reverse rotation is not allowed during startup and the position of the motor rotor may change after shutdown, P2-25 must be set to 1. In other cases, it can be set to 0, 2, or 3.

FVC (Flux Vector Control) detection is only performed during the first power-on operation when an ABZ encoder is used. It is recommended not to modify this setting, as doing so may pose a risk of runaway operation. The detection current value can be set via P2-24. A smaller current will result in less noise during detection, but if the current is too small, it may lead to inaccurate position detection. It is advised not to modify this setting in FVC mode.

P2-26	Speed Loop Mode Selection	default value	0
	setting range	0~1	

Two speed loop modes can be selected: 0 for normal speed control, and 1 for enhanced speed loop control.

P2-27	Synchronous Motor Saliency Adjustment Gain	default value	100
	setting range	50~500	
P2-28	Maximum Torque Current Ratio Control Enable	default value	0
	setting range	0: Disabled 1: Enabled	

This set of function codes is only valid when the motor is a convex permanent magnet synchronous motor (CPMSM), typically referring to an Interior Permanent Magnet Synchronous Motor (IPMSM). The criterion for identifying a CPMSM is when P1-18/P1-17 > 1.5. Once it is confirmed that the motor is a CPMSM, set P2-28 to 1. Under the same load conditions, the output current will decrease. If, after setting P2-28 to 1, the output current does not decrease or even increases under the same load, adjust P2-27. Continue adjusting P2-27 until the output current is minimized.

P2-30	Current Loop KP During Tuning	default value	6
	setting range	0~100	
P2-31	Current Loop KI During	default value	6

	Tuning		
	setting range	0~100	

This set of function codes is only used during parameter tuning.

During no-load tuning (when P1-37 is set to 12), if motor oscillation or divergence occurs during the tuning process, this set of function codes can be appropriately decreased or increased (usually decreased) until the tuning proceeds normally. For loaded tuning (when P1-37 is set to 11), modifications are generally not required.

P2-32	Z Signal Correction Enable	default value	1
	setting range	0~1	

This function code is only meaningful when the encoder is an incremental encoder. By default, Z-signal correction is enabled to eliminate cumulative position deviations. However, in some scenarios where there is significant interference with the encoder's Z signal, it may cause runaway operation,affect the motor's output power, or even trigger an Err20 encoder fault in severe cases. In such situations, P2-32 can be set to 0 to disable Z-signal correction.

P2-33	Synchronous Motor SVC Speed Filter Level	default value	100
	setting range	10~1000	

In synchronous machine SVC (Sensorless Vector Control) mode, if there are significant speed or current fluctuations, the speed filtering coefficient can be appropriately increased to make the estimated speed smoother.

P2-34	Synchronous Motor SVC Speed Estimation Proportional Gain	default value	40
	setting range	5~200	
P2-35	Synchronous Motor SVC Speed Estimation Integral Gain	default value	30
	setting range	5~200	

In synchronous machine SVC (Sensorless Vector Control) mode, these two parameters are the proportional and integral parameters for speed estimation, which generally do not need to be modified.

P2-36	Synchronous Motor SVC Initial Excitation Current	default value	30
	setting range	0~150	

To achieve better control performance at low speeds, a certain amount of excitation current is increased. The magnitude of this excitation current can be controlled via parameter P2-36, with a default value of 30% of the motor's rated current. Setting P2-36 to 0 means no additional excitation current is added. When the operating frequency exceeds 20% of the rated frequency, the excitation current is removed.

P2-37	Synchronous Motor SVC Minimum Carrier Frequency	default value	1.5
	setting range	0.8~100.0	

For improved low-speed load-carrying capability, SVC reduces the carrier frequency during low-speed operation. As the set frequency increases, the carrier frequency eventually reaches the set carrier frequency P0-15. Parameter P2-37 represents the starting minimum carrier frequency. A lower carrier frequency generally results in higher noise levels. If noise is a concern, P2-37 can be set to the same value as P0-15.

P2-43	Zero Servo Enable	default value	0
	setting range	0~1	
P2-44	Switching Frequency	default value	0.30
	setting range	0.00~655.35	
P2-45	Zero Servo Speed Loop Proportional Gain	default value	10
	setting range	1~100	
P2-46	Zero Servo Speed Loop Integral Time	default value	0.5
	setting range	0.01~10.00	

This set of parameters is used for configuring the zero-servo function. In scenarios where position holding and strong zero-servo stiffness are required, P2-43 can be set to 1 to enable the zero-servo function (with a default value of 0, indicating it is disabled). Before enabling this function, P2-26 should first be set to 1, which means using the speed loop with zero-servo capability. P2-44 is the switching frequency, while P2-45 and P2-46 are the proportional gain and integral time of the speed loop during zero-servo operation, respectively. Reducing P2-46, i.e., decreasing the integral time, can enhance the zero-servo stiffness. However, if it is set too small, oscillations may occur. Therefore, it needs to be reasonably adjusted according to the actual situation.

P2-47	Stop Reverse Prohibition	default value	0
	setting range	0~1	

P2-48	Stop Angle	default value	0.8
	setting range	0.0~10.0	

In scenarios where the motor may reverse during deceleration to a stop or when decelerating from a certain operating frequency to 0Hz, enabling the anti-reversal function by setting P2-47 to 1 can prevent this. The parameter P2-48 can be adjusted based on the severity of the reversal, with a default value of 0.8 degrees. If reversal still occurs under the default setting, the value of P2-48 can be appropriately increased until reversal is eliminated. For applications where reversal is not a critical concern, it is recommended not to enable this function.

P2-49	Online Tuning Enable	default value	0
	setting range	0: Disable 1: Tune Before First Run After Power-On 2: Tune Before Running	

During SVC (Sensorless Vector Control) operation, setting P2-49 to 1 enables automatic parameter tuning during the first power-on run, eliminating the need for a separate tuning step. Setting P2-49 to 2 enables automatic parameter tuning before each run, also without requiring a separate tuning step. Setting P2-49 to 0 disables this function, necessitating a separate tuning step.

P2-50	Online Back EMF Identification	default value	0
	setting range	0: Disable 1: Enable	

In SVC mode, setting P2-50 to 1 enables online back-EMF (Electromotive Force) identification, with the identified back-EMF value displayed via Function code U0-74. A low value may indicate motor demagnetization. Setting P2-50 to 0 disables this function.

P3 Group V/F Control Parameters

This group of Function codes is only valid for V/F control and not for vector control.

V/F control is suitable for general-purpose loads such as fans and pumps, or for applications where one drive powers multiple motors or where there is a significant power difference between the drive and the motor.

P3-00	V/F Curve Setting	default value	0

	setting range	0: Linear V/F 1: Multi-Point V/F 2: Square V/F 3: 1.2 Power V/F 4: 1.4 Power V/F 6: 1.6 Power V/F 8: 1.8 Power V/F 9: Reserved 10: V/F Full Separation Mode 11: V/F Half Separation Mode

0: Linear V/F. Suitable for ordinary constant torque loads.

1: Multi-point V/F. Suitable for special loads such as dehydrators and centrifuges. Arbitrary V/F relationship curves can be obtained by setting parameters P3-03~P3-08.

2: Square V/F. Suitable for centrifugal loads such as fans and pumps.

3~8: V/F relationship curves between linear and square V/F.

10: V/F fully separated mode. The output frequency and voltage of the drive are independent. The output frequency is determined by the frequency source, while the output voltage is determined by P3-13 (V/F separation voltage source). This mode is generally used in applications such as induction heating, inverter power supplies, and torque motor control.

11: V/F semi-separated mode. In this mode, V and F are proportional, but the proportional relationship can be set via the voltage source P3-13 and is also related to the motor's rated voltage and frequency specified in the P1 group.

P3-01	Torque Boost	default value	Model-dep
	setting range	0.0%~30%	
P3-02	Torque Boost Cutoff Frequency	default value	50.00Hz
	setting range	0.00Hz~Maximum Frequency	

Assuming the voltage source input is X (where X is a value between 0% and 100%), the relationship between the drive's output voltage V and frequency F is: V/F = 2X(motor rated voltage)/(motor rated frequency).

To compensate for the low-frequency torque characteristics of V/F control, some boost in the drive's output voltage at low frequencies can be applied. However, excessive torque boost may cause motor overheating and drive overcurrent.

When the load is heavy and the motor's starting torque is insufficient, it is recommended to increase this parameter. When the load is light, the torque boost can be reduced. When the torque boost is set to 0.0, the drive performs automatic torque boost, calculating the required torque boost value based on parameters such as the motor's stator resistance

12：The torque boost cut-off frequency is the frequency below which torque boost is effective; above this frequency, torque boost is disabled. Refer below diagram

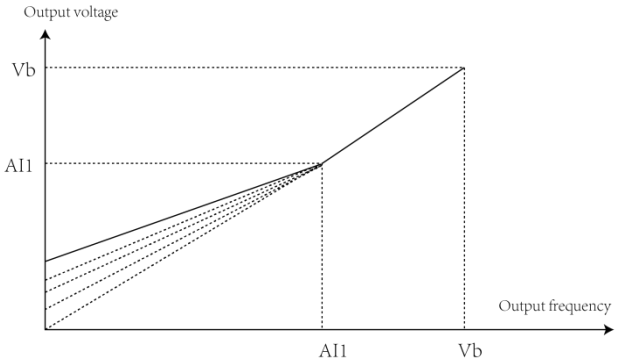

AI1：manual torque boost volatge Vb：Maximum output voltage

P1：manual torque boost cut-off frequency Pb：rated running frequency

Manual torque boost diagram

P3-08	setting range	P3-05~ motor rated frequency (P1-04) 注：motor2 rated frequency H2-04	
	Multi-Point V/F Voltage Point 3 AI3	default value	0.0%
	setting range	0.0%~100.0%	

Parameters P3-03~P3-08 define the multi-point V/F curve. The multi-point V/F curve should be set according to the motor's load characteristics. Note that the relationship between the three voltage points and frequency points must satisfy: AI1＜AI2＜AI3, f1＜f2＜f3 。See below diagram for the multi-point V/F curve setting.

Excessively high voltage settings at low frequencies may cause motor overheating or burnout; the drive may trigger overcurrent stalling or overcurrent protection.

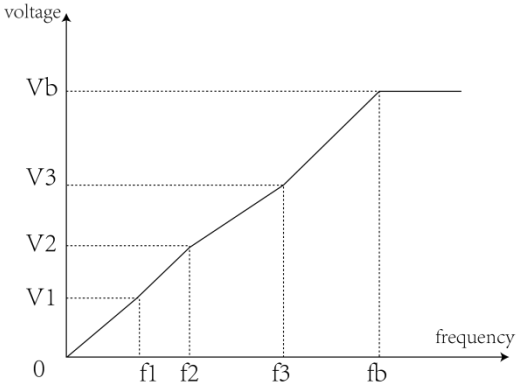

AI1-AI3： multi-point speed V/F
f1-f3： multi-point speed V/F
Vb：motor rated voltage
point1- 3 voltage%
point1- 3 frequency%
fb：motor rated running frequency

Multi-point curve setting diagram

P3-09	V/F Slip Compensation Gain	default value	80.0%
	setting range	0%~200.0%	

The parameter is valid to the asynchronous motor only。

V/F slip compensation can compensate for motor speed deviations caused by increased loads in asynchronous motors, maintaining a relatively stable motor speed under varying loads.

Setting the V/F slip compensation gain to 100.0% indicates that the compensated slip under rated motor load equals the motor's rated slip. The drive automatically calculates the rated slip using the P1 group parameters (rated frequency and rated speed).

When adjusting the V/F slip compensation gain, the principle is generally to achieve a motor speed that is basically the same as the target speed under rated load. When the motor speed differs from the target value, the gain should be appropriately fine-tuned.

For applications where the drive is prone to overvoltage alarms during deceleration, the over-excitation gain should be increased. However, excessive over-excitation gain may lead to increased output current and needs to be balanced in application.

In scenarios with very small inertia, where voltage does not rise during motor deceleration, it is recommended to set the over-excitation gain to 0. For applications with braking resistors, it is also recommended to set the over-excitation gain to 0

P3-11	V/F Oscillation Suppression Gain	default value	Model-dep
	setting range	0~100	

The selection method for this gain is to take the smallest value possible while effectively suppressing oscillations to avoid adverse effects on V/F operation. When there is no oscillation in the motor, set this gain to 0. Only when there is significant oscillation in the motor should this gain be appropriately increased. The larger the gain, the more obvious the suppression of oscillations.

When using the oscillation suppression function, the motor's rated current and no-load current parameters must be accurate; otherwise, the V/F oscillation suppression effect will be poor.

P3-13	V/F Separation Voltage Source		default value	0
	setting range	0: Digital Setting (P3-14) 1: AI1 2: AI2 3: AI3 4: PULSE Pulse Setting (DI5) 5: Multi-Step Command 6: Simple PLC 7: PID 8: Communication Given Note: 100.0% corresponds to motor rated voltage		
P3-14	V/F Separation Voltage Digital Setting		default value	0V
	setting range		0V~ motor rated voltage	

V/F separation is generally used in applications such as induction heating, inverter power supplies, and torque motor control. When selecting V/F separation control, the output voltage can be set via Function code P3-14 or derived from analog quantities, multi-segment instructions, PLC, PID, or communication settings.

0: Digital setting (P3-14)

The voltage is directly set by P3-14.

1: AI1 2: AI2 3: AI3

The voltage is determined by the analog input Terminal.

4: PULSE pulse setting (DI5)

The voltage setting is given through the Terminal pulse.

5: Multi-segment instructions

The voltage source for multi-segment instructions requires setting P4 group and PC group parameters to determine the correspondence between the given signal and the given voltage.

6: Simple PLC

The voltage source for simple PLC requires setting PC group parameters to determine the given output voltage.

7: PID

The output voltage is generated based on PID closed-loop control.

8: Communication setting

The voltage is given by the upper computer through communication.

The selection method for the V/F separation voltage source is similar to the frequency source selection method, referring to the P0-03 main frequency source selection introduction.

P3-15	V/F Separation Voltage Rise Time	default value	0.0s
	setting range	0.0s~1000.0s	
P3-16	V/F Separation Voltage Deceleration Time	default value	0.0s
	setting range	0.0s~1000.0s	

The V/F separation rise time refers to the time required for the output voltage to change from 0V to the motor's rated voltage

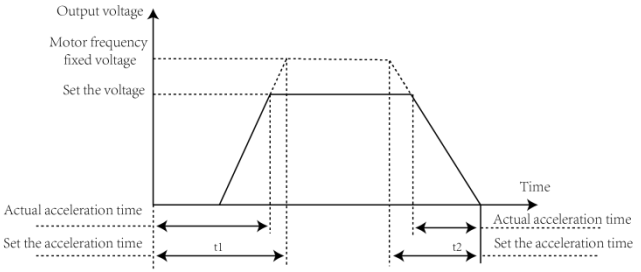

VF SEPARATION DIAGRAM

P3-17	V/F Separation Stop Mode	default value	0
	setting range	0: Frequency/Voltage Independently Reduced to 0 1: Frequency Reduced After Voltage Reaches 0	

0: Frequency/voltage independently decreases to V/F separation output voltage, which decreases to 0V according to the voltage decrease time (P3-15); the V/F separation output frequency simultaneously decreases to 0Hz according to the deceleration time (P0-18).

1: Voltage decreases to 0 before frequency decreases.

The V/F separation output voltage first decreases to 0V according to the voltage decrease time (P3-15), and then the frequency decreases to 0Hz according to the deceleration time (P0-18).

P3-18	Slip Compensation Time Constant	default value	0.30s
	setting range	0.02s~1.00s	
P3-19	Online Torque Compensation Gain	default value	100%
	setting range	80%~150%	

When V/F slip compensation is effective, an appropriate slip compensation time constant can enhance the stability of motor speed after slip compensation.

P3-29	Automatic Frequency Increase Enable	default value	0
	setting range	0: Disable 1: Enable	
P3-30	Minimum Motoring Torque Current	default value	50
	setting range	10~100	
P3-31	Maximum Generating Torque Current	default value	20
	setting range	10~100	
P3-32	Automatic Frequency Increase KP	default value	50
	setting range	0~100	
P3-33	Automatic Frequency Increase KI	default value	50
	setting range	0~100	

Automatic frequency increase is mainly applied in scenarios where the load's center of gravity deviates from the physical center, causing bus voltage to rise due to load energy feedback during constant-speed operation, such as in the application of frequency converters in stone sawing machines.

P4 Group Input Terminals

This series of drives comes standard with 5 multi-functional digital input terminals (where DI5 can be used as a high-speed pulse input terminal) and 2 analog input terminals. If the system requires more input/output terminals, a multi-functional input/output expansion card with 5 multi-function digital input terminals(DI6~DI10) and 1 analog input terminal (AI3) can be selected.

Function code	**Name**	**Default value**	Remark
P4-00	DI1 Terminal Function Selection	1 (Forward Run)	Standard config
P4-01	DI2 Terminal Function Selection	4 (Forward Jog)	Standard config
P4-02	DI3 Terminal Function Selection	9 (Fault rest)	Standard config
P4-03	DI4 Terminal Function Selection	12(multi-step speed 1)	Standard config
P4-04	DI5 Terminal Function Selection	13(multi-step speed 2)	Standard config
P4-05	DI6 Terminal Function Selection	0	Expansion
P4-06	DI7 Terminal Function Selection	0	Expansion
P4-07	DI8 Terminal Function Selection	0	Expansion
P4-08	DI9 Terminal Function	0	Expansion

	Selection		
P4-09	DI10 Terminal Function Selection	0	Expansion

The parameters are used to set the functions of the digital multi-functional input terminals. The available functions are as follows:

Set value	**Funciton**	Note
0	No Function	Unused terminals can be set to "No Function" to prevent misoperation.
1	Forward Run (FWD) or Run Command	The forward and reverse rotation of the drive is controlled through external terminals.
2	Reverse Run (REV) or Forward/Reverse Direction	
3	Three-Wire Run Control	This terminal is used to determine the drive operation mode as three-wire control mode. For detailed information, please refer to the description of function code P4-11 ("Terminal Command Mode").
4	Forward Jog (FJOG)	FJOG is used for inching forward operation, while RJOG is used for inching reverse operation. Please refer to function codes P8-00, P8-01, and P8-02 for the explanation of inching operation frequency and acceleration/deceleration time.
5	Reverse Jog (RJOG)	
6	Terminal UP	When the frequency is given by external terminals, modify the increasing and decreasing commands of the frequency. When the frequency source is set to digital setting, the set frequency can be adjusted up and down.
7	TerminalDOWN	
8	Free Stop	The drive blocks output, and the motor's stopping process is not controlled by the drive at this time. This method has the same meaning as the free stopping described in P6-10.
9	Fault Reset (RESET)	Function of fault reset using terminal. It has the same function as the RESET key on the keyboard. This function enables remote fault reset.
10	Run Pause	The drive decelerates and stops, but all operating parameters are memorized. These include PLC parameters, oscillation frequency parameters, and PID parameters. When this terminal signal disappears, the drive resumes its previous operating state before stopping.
11	External Fault Normally Open Input	When this signal is sent to the driver, the driver reports error ERR15 and performs fault handling according to the fault protection action mode (refer to function code P9-47 for details).
12	Multi-Step Command Terminal 1	Through the 16 states of these four terminals, 16 speed levels or 16 other instructions can be set. Please refer to Appendix 1 for detailed information.
13	Multi-Step Command Terminal2	
14	Multi-Step Command Terminal 3	
15	Multi-Step Command Terminal 4	

16	Accel/Decel Time Selection Terminal 1	Through the four states of these two terminals, four acceleration and deceleration time options can be selected. See Appendix 2 for details.
17	Accel/Decel Time Selection Terminal 2	
18	Frequency Source Switch	This is used to switch and select different frequency sources. According to the setting of the frequency source selection function code (P0-07), when two specific frequency sources are set for switching as the frequency source, this terminal is used to switch between the two frequency sources.
19	UP/DOWN Setting Clear (Terminal, Keypad)	When the frequency is set digitally, this terminal can clear the frequency value changed by the UP/DOWN terminal or keyboard UP/DOWN, and restore the set frequency to the value set by P0-08.
20	Control Command Switch Terminal 1	When the command source is set to terminal control (P0-02=1), this terminal can switch between terminal control and keyboard control. When the command source is set to communication control (P0-02=2), this terminal can switch between communication control and keyboard control.
21	Accel/Decel Prohibition	Ensure that the drive is not affected by external signals (except for shutdown commands), and maintain the current output frequency.
22	PID Pause	"The PID is temporarily disabled, and the driver maintains the current output frequency without further PID adjustment of the frequency source."
23	PLC State Reset	When the PLC pauses during execution, it can be reset to the initial state of the simple PLC through this terminal when restarted.
24	Swing Frequency Pause	The drive outputs at the center frequency. The frequency swing function is paused.
25	Counter Input	Input terminal for counting pulses
26	Counter Reset	Clear/Reset the counter state.
27	Length Count Input	Length counting input terminal
28	Length Reset	Length Reset
29	Torque Control Prohibition	Disable torque control of the drive, and switch the drive to speed control mode
30	PULSE (Pulse) Frequency Input (Valid only for DI5)	Function of DI5 as Pulse Input Terminal
31	Reserved	Reserved
32	Immediate DC Braking	When this terminal is activated, the driver directly switches to DC braking state.
33	External Fault Normally Closed Input	When the normally-closed external fault signal is input to the driver, the driver reports fault ERR15 and shuts down.
34	Frequency Modification Enable	If this function is set to active, the drive will not respond to frequency changes until the terminal status becomes inactive.
35	PID Action Direction Reversal	When this terminal is active, the PID action direction is opposite to the direction set by PA-03.
36	External Stop Terminal 1	When using keyboard control, this terminal can be used to stop the driver, which is equivalent to the function of the STOP key on the keyboard.

37	Control Command Switch Terminal 2	Used for switching between terminal control and communication control. If the command source is set to terminal control, when this terminal is activated, the system switches to communication control; vice versa.
38	PID Integral Pause	When this terminal is active, the integral function of PID is paused while the proportional and derivative functions remain effective.
39	Frequency Source X and Preset Frequency Switch	When active, replaces Frequency Source X with preset frequency (P0-08)
40	Frequency Source Y and Preset Frequency Switch	When active, replaces Frequency Source Y with preset frequency (P0-08)
41	Motor Selection Terminal 1	Four terminal states enable switching between 4 motor parameter sets (see Appendix 3)
42	Motor Selection Terminal 2	
43	PID Parameter Switch	When PID parameter switching is DI-terminal controlled (PA-18=1): Inactive: Uses parameters PA-05~PA-07 Active: Uses parameters PA-15~PA-17
44	User-Defined Fault 1	When user-defined Fault 1/Fault 2 are triggered: Drive generates ERR27/ERR28 alarms respectively Protection follows action mode selected in P9-49
45	User-Defined Fault 2	
46	Speed Control/Torque Control Switch	Switches between torque and speed control modes: Inactive: Operates in H0-00 defined mode Active: Switches to alternate mode
47	Emergency Stop	When activated: Drive stops at maximum deceleration rate Current maintains at set upper limit during braking Designed for critical system emergency stops
48	External Stop Terminal 2	Functions in all control modes (panel/terminal/communication): Initiates fixed deceleration time (Decel Time 4)
49	Deceleration DC Braking	When activated: Drive decelerates to DC brake start frequency Then engages DC braking
50	Clear Current Run Time	When activated: Clears current operation timer Requires coordination with: • Timed operation (P8-42) • Runtime limit (P8-53)

4 multi-segment instruction terminals can be combined into 16 states, corresponding to 16 instruction setting values.

K4	K3	K2	K1	Command Settings	Corresponding parameter
OFF	OFF	OFF	OFF	Multi-stage command0	PC-00
OFF	OFF	OFF	ON	Multi-stage command1	PC-01
OFF	OFF	ON	OFF	Multi-stage command2	PC-02

OFF	OFF	ON	ON	Multi-stage command3	PC-03
OFF	ON	OFF	OFF	Multi-stage command4	PC-04
OFF	ON	OFF	ON	Multi-stage command5	PC-05
OFF	ON	ON	OFF	Multi-stage command6	PC-06
OFF	ON	ON	ON	Multi-stage command7	PC-07
ON	OFF	OFF	OFF	Multi-stage command8	PC-08
ON	OFF	OFF	ON	Multi-stage command9	PC-09
ON	OFF	ON	OFF	Multi-stage command10	PC-10
ON	OFF	ON	ON	Multi-stage command11	PC-11
ON	ON	OFF	OFF	Multi-stage command12	PC-12
ON	ON	OFF	ON	Multi-stage command13	PC-13
ON	ON	ON	OFF	Multi-stage command14	PC-14
ON	ON	ON	ON	Multi-stage command15	PC-15

When multi-step speed selection is activated, the 100.0% setting in Function codes PC-00~PC-15 corresponds to the Maximum Frequency (P0-10), while the multi-step commands additionally function as a PID reference source or voltage source for V/F separation control, enabling flexible switching between setpoints across applications.

Acceleration/deceleration time selection terminal function explanation

Terminal2	**Terminal1**	Acceleration/Deceleration Time Selection	Corresponding parameter
OFF	OFF	Acceleration time 1	P0-17、P0-18
OFF	ON	Acceleration time 2	P8-03、P8-04
ON	OFF	Acceleration time 3	P0-05、P0-06
ON	ON	Acceleration time 4	P0-07、P0-08

motor selection terminal function explanation

Terminal2	**Terminal1**	Motor selection	Corresponding parameter
OFF	OFF	Motor 1	P1、P2 group
OFF	ON	Motor 2	H2 group
P4-10	DI digital input Terminal filtering time	default value	0.011s
	setting range	0.000s~1.000s	

The software filtering time for the DI digital input terminal state is set. If the input terminals are prone to interference causing false operations in the application environment, this parameter can be increased to enhance anti-interference ability. However, increasing the filtering time will slow down the response of the DI digital input terminal.。

P4-11	Terminal command		default value	0
	setting range	0	2 wire type 1	
		1	2 wire type 2	
		2	3 wire type 1	
		3	3 wire type 2	

This parameter defines four different ways to control the drive through external terminals.

For the convenience of explanation, three multi-functional input terminals DI1, DI2, and DI3 are arbitrarily selected as external terminals below. By setting the values of P4-00~P4-02 to select the functions of DI1, DI2, and DI3, the detailed function definitions are provided in the setting range of P4-00~P4-09.

0: Two-wire mode 1: This mode is the most commonly used two-wire mode. The motor's forward and reverse rotation are determined by terminals DI1 and DI2. The Function code settings are as follows:

Function code	Name	Set value	Function description
P4-11	Terminal command mode	0	2 wire type 1
P4-00	DI1 Terminal Function Selection	1	Forward run（FWD)
P4-01	DI2 Terminal Function Selection	2	Reverse run（REV)

K1	K2	Running command
1	0	forward
0	1	reverse
1	1	stop
0	0	stop

2 wire type 2

As shown above, in this control mode, the drive runs forward when K1 is closed and K2 is open; it runs in reverse when K2 is closed; and it stops when K1 is open.

2: Three-wire control, mode 1: In this mode, DI3 is the enable terminal, and the direction is controlled by DI1 and DI2.

The Function code settings are as follows:

Function code	Name	Set value	Function description
P4-11	Terminal command mode	2	3 wire type 1
P4-00	DI1 Terminal Function Selection	1	operation enable
P4-01	DI2 Terminal Function Selection	2	forward and reverse running
P4-02	DI3 Terminal Function Selection	3	three-wire operation control

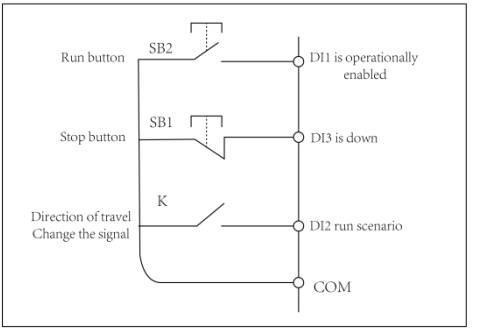

3 Wire control mode1

As shown above, in this control mode, the drive runs forward when the SB1 button is closed and the SB2 button is pressed; it runs in reverse when the SB3 button is pressed; and it stops when the SB1 button is open. During normal startup and operation, the SB1 button must remain closed, and the commands of the SB2 and SB3 buttons take effect immediately upon closure. The running state of the drive is determined by the last button action of the three buttons.

3:3 Wire control mode 2： In this mode, DI3 acts as the enable terminal. The run command is issued via DI1, while the rotation direction is determined by the status of DI2.The Function code settings are as follows：

Function code	Name	Set value	Function description
P4-11	Terminal command mode	2	3 wire type 1
P4-00	DI1 Terminal Function Selection	1	operation enable
P4-01	DI2 Terminal Function Selection	2	forward and reverse running
P4-02	DI3 Terminal Function Selection	3	three-wire operation control

K	Running direction

0	Forward
1	Reverse

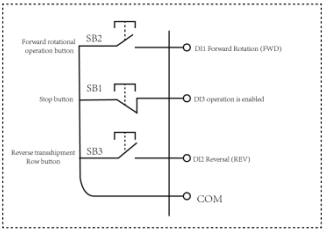

3 Wire control mode 2

As shown in the diagram, this control mode requires SB1 to remain closed during normal operation, where pressing SB2 activates drive rotation (forward when K is open, reverse when K is closed), while instantaneous opening of SB1 triggers immediate shutdown; all SB2 commands take effect upon the closing edge transition of its signal.

P4-12	Terminal UP/DOWN Change Rate	default value	1.00Hz/s
	setting range	0.01Hz/s~65.535Hz/s	

This Function code is used to set the frequency change speed when adjusting the set frequency via the Terminal UP/DOWN, i.e., the frequency change per second.

P4-13	Analog Input 1 Minimum Input	default value	0.00V
	setting range	0.00V~P4-15	
P4-14	Analog Input 1 Minimum Input Corresponding Setting	default value	0.0%
	setting range	-100.00%~100.0%	
P4-15	Analog Input 1 Maximum Input	default value	10.00V
	setting range	P4-13~10.00V	
P4-16	Analog Input 1 Maximum Input Corresponding Setting	default value	100.0%
	setting range	-100.00%~100.0%	
P4-17	AI1 Filter Time	default value	0.10s
	setting range	0.00s~10.00s	

The above Function codes are used to set the relationship between the analog input voltage and its representative setting value.

When the analog input voltage is greater than the set "maximum input" (P4-15), the analog voltage is calculated according to the "maximum input". Similarly, when the analog input voltage is

less than the set "minimum input" (P4-13), the analog voltage is calculated based on the "minimum input" or 0.0% depending on the setting of "analog input lower than the minimum input setting"(P4-34).

When the analog input is current input, 1mA current is equivalent to 0.5V voltage.

The AI1 input filtering time is used to set the software filtering time for AI1. When the on-site analog quantity is easily disturbed, please increase the filtering time to stabilize the detected analog quantity. However, a larger filtering time will slow down the response speed of analog quantity detection. The setting needs to be balanced according to the actual application situation.

In different application scenarios, the 100.0% corresponding to the nominal value of analog setting has different meanings, please refer to the explanations in each application section for details. The following two diagrams are examples of two typical settings:

P4-18	Analog Input 2 Minimum Input	default value	
	setting range	0.00V~P4-20	
P4-19	Analog Input 2 Minimum Input Corresponding Setting	default value	
	setting range	-100.0%~+100.0%	
P4-20	Analog Input 2 Maximum Input	default value	
	setting range	P4-18~+10.00V	
P4-21	Analog Input 2 Maximum Input Corresponding Setting	default value	
	setting range	-100.0%~+100.0%	
P4-22	AI2 Filter Time	default value	
	setting range	0.00s~ 10.00s	
P4-23	Analog Input 3 Minimum Input	default value	
	setting range	-10.00V~P4-23	
P4-24	Analog Input 3 Minimum Input Corresponding Setting	default value	
	setting range	-100.0%~+100.0%	
P4-25	Analog Input 3 Maximum Input	default value	
	setting range	P4-23~+10.00V	
P4-26	Analog Input 3 Maximum Input Corresponding Setting	default value	100 .0%
	setting range	-100.00%~100.0%	
P4-27	AI3 Filter Time	default value	0.50s
	setting range	0.00s~10.00s	

Function and application of curve 3, please refer to the curve 1.

P4-28	PULSE Minimum Input	default value	0 .00kHz
	setting range	00.00kHz~P4-30	
P4-29	PULSE Minimum Input Corresponding Setting	default value	0.0%
	setting range	-100.00%~100.0%	
P4-30	PULSE Maximum Input	default value	50 .00kHz
	setting range	P4-28~50.00kHz	
P4-31	PULSE Maximum Input Setting	default value	100 .0%
	setting range	-100.00%~100.0%	
P4-32	PULSE Filter Time	default value	0. 10s
	setting range	0.00s~10.00s	

The function and usage method of this group of Function codes for setting the relationship between DI5 pulse frequency and corresponding settings are similar to curve 1, please refer to the explanation of curve 1 for details.

P4-33	Analog Input Curve Selection	default value	321
	setting range	Bit 0: AI1 Curve Selection 1: Curve 1 (2 points, see P4-13~P4-16) 2: Curve 2 (2 points, see P4-18~P4-21) 3: Curve 3 (2 points, see P4-23~P4-26) 4: Curve 4 (4 points, see H6-00~H6-07) 5: Curve 5 (4 points, see H6-08~H6-15) Bit 10: AI2 Curve Selection, as above Bit 100: AI3 Curve Selection, as above	

The units, tens, and hundreds digits of this Function code respectively select the configuration curves for analog inputs AI1, AI2, and AI3. Each analog input can independently choose any of the 5 available curve types.

2. Curve Configuration Groups:

Curves 1/2/3 (2-point): Configured via F4-group Function codes.

Curves 4/5 (4-point): Configured via H6-group Function codes.

The drive's standard unit provides 2 analog input ports. AI3 requires a multi-functional input/output expansion card.

P4-34	Analog Input Below Minimum Input Setting Selection	default value	000

	setting range	Bit 0: AI1 Below Minimum Input Setting Selection 0: Corresponds to Minimum Input Setting 1: 0.0% Bit 10: AI2 Below Minimum Input Setting Selection, as above Bit 100: AI3 Below Minimum Input Setting Selection, as above

This Function code is used to set how the analog input voltage corresponds to the set value when the analog input voltage is less than the set "minimum input". The units, tens, and hundreds digits of this Function code are respectively used to select the setting curves corresponding to analog inputs AI1, AI2, and AI3.

If the selection is 0, when the analog input is lower than the "Minimum Input", the corresponding setting for this analog input will be the curve's "Minimum Input Corresponding Setting" (P4-14, P4-19, P4-24) determined by the Function code. If the selection is 1, when the analog input is lower than the minimum input, the corresponding setting for this analog input will be 0.0%.

P4-35	DI1Delay Time	default value	0.0s
	setting range	0.0s~3600.0s	
P4-36	DI2Delay Time	default value	0.0s
	setting range	0.0s~3600.0s	
P4-37	DI3Delay Time	default value	0.0s
	setting range	0.0s~3600.0s	

Setting the delay time for the driver to respond to changes in the DI digital input terminal status. Currently, only DI1, DI2, and DI3 have the function of setting delay time.

P4-38	DI Digital Input Terminal Valid Mode Selection 1	default value	00000
	setting range	0: High Level Valid 1: Low Level Valid Bit 0: DI1 Bit 10: DI2 Bit 100: DI3 Bit 1000: DI4 Ten Bit 1000: DI5	
P4-39	DI Digital Input Terminal Valid Mode Selection 2	default value	00000
	setting range	0: High Level Valid 1: Low Level Valid Bit 0: DI6 Bit 10: DI7 Bit 100: DI8 Bit 1000: DI9 Ten Bit 1000: DI10	

Sets the valid state mode for the DI digital input terminal.

When selected as active high, the corresponding DI digital input terminal is active when connected to COM and inactive when disconnected.

When selected as active low, the corresponding DI digital input terminal is inactive when connected to COM and active when disconnected.

P5 Group Output Terminals

This series of drives comes standard with 1 multi-functional analog output terminal (AO1), 1 multi-functional digital output terminal (DO1), and 1 multi-functional relay output terminal (TA1-TB1-TC1). Expansion cards can be optionally equipped with 1 high-speed pulse output terminal (FM), 1 multi-functional analog output terminal (AO2), and 2 multi-functional relay output terminals (TA2-TB2-TC2, TA3-TB3-TC3).

P5-00	FM and AO2 Terminal Output Mode Selection	Bit 0: FM Terminal Function Selection 0: Pulse Output 1: Switch Output (TA2-TB2-TC2) Bit 10: AO2 Terminal Function Selection 0: Analog Output 1: Switch Output (TA3-TB3-TC3)	11	☆

FM Terminal and TA2-TB2-TC2 are mutually exclusive functional terminals, selected through J2 jumpers on the expansion card. AO2 and TA3-TB3-TC3 are mutually exclusive functional terminals, selected through J3 jumpers on the expansion card.

As a pulse output FM, the maximum output frequency is 100kHz. Related FM functions are described in P5-06.

P5-01	Relay Output Function Selection (TA2-TB2-TC2)	0: No Output 1: Inverter Running 2: Fault Output (for free stop faults) 3: Frequency Level Detection FDT1 Output 4: Frequency Reached 5: Zero Speed Running (No Output at Stop) 6: Motor Overload Pre-Alarm 7: Inverter Overload Pre-Alarm 8: Set Count Value Reached 9: Designated Count Value Reached 10: Length Reached 11: PLC Cycle Completed 12: Cumulative Run Time Reached	0	☆
P5-02	Control Board Relay Function Selection (TA1-TB1-TC1)		2	☆
P5-03	Relay Output Function Selection (TA3-TB3-TC3)		0	☆
P5-04	DO1 Output Function Selection		1	☆

P5-05	Expansion Card DO2 Output Selection	13: Frequency Limited 14: Torque Limited 15: Run Ready 16: AI1>AI2 17: Upper Limit Frequency Reached 18: Lower Limit Frequency Reached (Run-Related) 19: Undervoltage State Output 20: Communication Setting 21: Positioning Completed (Reserved) 22: Positioning Approach (Reserved) 23: Zero Speed Running 2 (Output Even at Stop) 24: Cumulative Power-On Time Reached 25: Frequency Level Detection FDT2 Output 26: Frequency 1 Reached Output 27: Frequency 2 Reached Output 28: Current 1 Reached Output 29: Current 2 Reached Output 30: Timing Reached Output 31: AI1 Input Exceeded Limit 32: Load Dropped 33: Reverse Running 34: Zero Current State 35: Module Temperature Reached 36: Output Current Exceeded Limit 37: Lower Limit Frequency Reached (Output Even at Stop) 38: Alarm Output (All Faults) 39: Motor Over-Temperature Pre-Alarm 40: Current Run Time Reached 41: Non-Undervoltage Fault Output (for free stop faults) 45: Brake Output	4	☆

The above 5 Function codes are used to select the functions of 5 digital outputs, where TA1-TB1-TC1 is the relay on the control board. The functions of the multi-functional output terminals are explained as follows:

Set Value	Function Name	Explanation
27	Frequency 2 Reached Output	Refer to parameter P8-32/P8-33 description
28	Current 1 Reached Output	Refer to parameter P8-38/P8-39 description
29	Current 2 Reached Output	Refer to parameter P8-40/P8-41 description
30	Timer Expired Output	Outputs ON signal when runtime exceeds set duration (P8-42) during operation
31	AI1 Input Out-of-Range	Outputs ON when AI1 exceeds P8-46 (upper limit) or falls below P8-45 (lower limit)
32	Load Loss Status	Outputs ON when drive detects load loss condition

33	Reverse Running Status	Outputs ON during reverse rotation operation
34	Zero Current Status	Refer to parameter P8-28/P8-29 description
35	Module Overtemperature	Outputs ON when heatsink temperature (P7-07) reaches threshold (P8-47)
36	Software Current Limit	Refer to parameter P8-36/P8-37 description
37	Lower Frequency Limit Reached	Outputs ON when operating frequency reaches lower limit (maintains ON at standstill)
38	Alarm Output	Activates when non-critical faults occur (drive continues operation)
39	Motor Overtemperature Warning	Outputs ON when motor temperature exceeds P9 -58 threshold (view actual temp at U0-34)
40	Runtime Limit Reached	Outputs ON when operation time exceeds P8-53 setting
41	Non-undervoltage Fault Output	Outputs ON when non-undervoltage fault causes shutdown
42	Motor 1 VFD Contactor Control	Controls variable frequency contactor for Motor 1
43	Motor 1 Line Contactor Control	Controls line frequency contactor for Motor 1
44	Motor 2 VFD Contactor Control	Controls variable frequency contactor for Motor 2
45	Motor 2 Line Contactor Control	Controls line frequency contactor for Motor 2
46	Motor 3 VFD Contactor Control	Controls variable frequency contactor for Motor 3
47	Motor 3 Line Contactor Control	Controls line frequency contactor for Motor 3

P5-06	FMP Output Function Selection	default value	0
P5-07	AO1 Output Function Selection	default value	0
P5-08	AO2 Output Function Selection	default value	1

The output pulse frequency range of the FMP Terminal is from 0.01kHz to P5-09 (FMP output Maximum Frequency), where P5-09 can be set within the range of 0.01kHz to 100.00kHz.

The output range of the analog outputs AO1 and AO2 is from 0V to 10V, or from 0mA to 20mA.

The scaling relationships between the output ranges of pulse outputs or analog outputs and their corresponding functions are as shown in the following table:

Set Value	Function	Pulse/Analog Output (0.0%~100% Scaling)

0	Operating Frequency	0~Maximum Frequency (100% = P0-10)
1	Target Frequency	0~Maximum Frequency
2	Output Current	0~2×Motor Rated Current (100% = 2×Rated)
3	Output Torque (Absolute)	0~2×Motor Rated Torque (Absolute value, % of motor rating)
4	Output Power	0~2×Rated Power (100% = 2×Rated)
5	Output Voltage	0~1.2×Rated Voltage (100% = 1.2×Rated)
6	PULSE Input	0.01kHz~100.00kHz (100% = 100.0kHz)
7	AI1	-10V~10V (100% = 10V)
8	AI2	-10V~10V (or 0~20mA, 100% = 10V)
9	AI3	0V~10V (or 0~20mA, 100% = 10V)
10	Length	0~Max Length (100% = PB-05)
11	Counter Value	0~Max Count (100% = PB-08)
12	Communication Setting	0.0%~100.0% (100% = AO comm setting)
13	Motor Speed	0~Speed at Max Freq (100% = F0-10)
14	Output Current (Absolute)	0.0A~1000.0A (100% = 1000.0A)
15	Output Voltage (Absolute)	0.0V~1000.0V (100% = 1000.0V)
16	Output Torque (Actual)	-2×Rated~2×Rated Torque (100%=+2×, 50%=0, 0%=-2×)

P5-09	FMP Output Maximum Frequency	default value	50.00kHz
	setting range	0.01kHz~100.00kHz	

When the FM Terminal is selected for pulse output, this Function code is used to select the Maximum Frequency value for the output pulses.

P5-10	AO1 Zero Offset Coefficient	default value	0.0%
	setting range	-100.0%~+100.0%	
P5-11	AO1 Gain	default value	1.00
	setting range	-10.00~+10.00	
P5-12	AO2 Zero Offset Coefficient	default value	0.00%
	setting range	-100.0%~+100.0%	
P5-13	AO2 Gain	default value	1.00
	setting range	-10.00~+10.00	

The Function code mentioned above is generally used to correct the zero offset and output amplitude deviation of analog outputs. It can also be employed to customize the desired AO (Analog Output) curve.

Let the zero offset be denoted as "b", the gain as "k", the actual output as "Y", and the standard output as "X". Then, the actual output can be expressed as: Y = kX + b. Here, the zero offset coefficient for AO1 and AO2 corresponds to 10V (or 20mA) at 100%. The standard output refers to the quantity represented by the analog output within the range of 0V~10V (or 0mA~20mA) without any zero offset or gain correction.

The calculation methods for the AO zero offset coefficient (P5-10) and AO gain (P5-11) are as follows:

For instance, if the analog output represents the operating frequency and it is desired that the output be 8V (Y1) when the frequency is 0Hz (X1), and 4V (Y2) when the frequency is 40Hz (X2), the gain can be calculated using the formula:

K = (Y1 - Y2) * Xmax / [(X1 - X2) * Ymax]

The zero offset coefficient can be calculated using the formula:

b = [(X1 * Y2) - (X2 * Y1)] / [(X1 - X2) * Ymax] * 100%

Where Xmax is the Maximum Frequency, assumed to be 50Hz (if the Maximum Frequency F0-10 is set to 50Hz), and Ymax is the voltage, which is 10V. Therefore, the AO gain (P5-11) should be set to -0.5, and the AO zero offset coefficient (P5-10) should be set to 80%.

Xmax and Ymax values can be looked up in the table below.

Output signal type	**Output signal maximum value（Ymax）**
voltage	10V
current	20mA
Analog Output Parameter	**Maximum Value (Xmax)**
Operating Frequency	Maximum Frequency (P0-10)
Target Frequency	Maximum Frequency
Output Current	2 × Motor Rated Current
Output Torque (Absolute)	2 × Motor Rated Torque
Output Power	2 × Rated Power
Output Voltage	1.2 × Drive Rated Voltage
Pulse Input	100.00 kHz
AI1	±10V
AI2	±10V or 20mA

AI3	0-10V or 20mA
Length	Maximum Set Length (PB-05)
Counter Value	Maximum Count Value (PB-08)
Communication Setting	100.0% of AO Setting
Motor Speed	Speed at Maximum Frequency (F0-10)
Output Current (Actual)	1000.0A
Output Voltage (Actual)	1000.0V
Output Torque (Actual)	±2 × Motor Rated Torque

P5-17	FMR Output Delay Time	default value	0.0s
	setting range	0.0s~3600.0s	
P5-18	TA1- TB1- TC1 Output Delay Time	default value	0.0s
	setting range	0.0s~3600.0s	
P5-19	TA2 -TC2 Output Delay Time	default value	0.0s
	setting range	0.0s~3600.0s	
P5-20	DO1 Output Delay Time	default value	0.0s
	setting range	0.0s~3600.0s	
P5-21	DO2 Output Delay Time	default value	0.0s
	setting range	0.0s~3600.0s	

Set the delay time from when the state of the output Terminal FMR, Relay 1, Relay 2, DO1, and DO2 changes to when the actual output changes.

P5-22	DO Output Terminal Valid State Selection	default value	00000
	setting range: 0:Positive Logic 1:Negative Logic	0: Positive Logic 1: Negative Logic Bit0: FMR Bit10: TA1-TB1-TC1 Bit100: TA3-TB3-TC3 Bit1000: DO1 (TA2-TB2-TC2) Ten Bit 1000: DO2	

Define the output logic for the output Terminal FMR, TA1-TB1-TC1, TA2-TC2, DO1, and DO2 (extended to Relay outputs TA4-TB4-TC4 for some models):

0:Positive logic, where the digital output Terminal being connected to the corresponding common terminal is the effective state, and being disconnected is the ineffective state.

1:Negative logic, where the digital output Terminal being connected to the corresponding common terminal is the ineffective state, and being disconnected is the effective state.。

P5-24	FMR Delay Off Time	default value	0.0s
	setting range	0.0s~3600.0s	
P5-25	TA1-TB1-TC1 Delay Off Time	default value	0.0s
	setting range	0.0s~3600.0s	
P5-26	TA2-TC2 Delay Off Time	default value	0.0s
	setting range	0.0s~3600.0s	
P5-27	DO1 Delay Off Time	default value	0.0s
	setting range	0.0s~3600.0s	
P5-28	DO2 Delay Off Time	default value	0.0s
	setting range	0.0s~3600.0s	

Set the delay time for stopping the output of the output Terminal FMR, Relay 1, Relay 2, DO1, and DO2.

P6 Group: Start/Stop Control

P6-00	Start Mode	default value	0
	setting range	0: Direct Start 1: Speed Tracking Restart 2: Pre-Excitation Start	

0: Direct Start

If the start DC braking time is set to 0, the drive starts from the start frequency. If the start DC braking time is not 0, DC braking is applied first, and then the drive starts from the start frequency. This is suitable for small inertia loads where the motor may already be rotating during startup.

1: Speed Tracking Restart

The drive first judges the speed and direction of the motor and then restarts at the tracked motor frequency, enabling a smooth and impact-free restart of the rotating motor. This is suitable for instantaneous power failure restarts of large inertia loads. To ensure the performance of speed tracking restart, accurately set the motor P1 group parameters.

2: Asynchronous Motor Pre-Excitation Start

This is only valid for asynchronous motors and is used to establish the magnetic field before the motor runs. Refer to the descriptions of Function codes P6-05 and P6-06 for the pre-excitation current and pre-excitation time.

If the pre-excitation time is set to 0, the drive cancels the pre-excitation process and starts from the start frequency. If the pre-excitation time is not 0, pre-excitation is applied first, and then the drive starts, which can improve the motor's dynamic response performance.。

P6-01	Speed Tracking Mode	default value	0
	setting range	0: Start from Stop Frequency 1: Start from Zero Speed 2: Start from Maximum Frequency 3: Start from Current Frequency, Valid for V/F Control	

To complete the speed tracking process in the shortest time, choose the method for the drive to track the motor speed:

0: Track downward from the frequency at the time of power failure. This method is usually selected.

1: Track upward from 0 frequency. This method is used when the power failure time is long and a restart is required.

2: Track downward from the Maximum Frequency. This method is generally used for generative loads.

3: Track the current speed and direction of the motor. This method is generally used when the motor may be running in reverse before startup, enabling faster tracking speed. It is only limited to the V/F control mode.

P6-02	Speed Tracking Speed	default value	20
	setting range	1~100	

When performing a speed tracking restart, choose the speed of speed tracking.

A larger parameter value results in faster tracking speed. However, setting it too large may cause unreliable tracking effects.

P6-03	Start Frequency	default value	0.00Hz
	setting range	0.00Hz~10.00Hz	
P6-04	Start Frequency Hold Time	default value	0.0s
	setting range	0.0s~100.0s	

To ensure the motor torque during startup, set an appropriate start frequency. To fully establish the magnetic flux during motor startup, the start frequency needs to be maintained for a certain period.

The start frequency (P6-03) is not limited by the lower frequency limit. However, if the set target frequency is lower than the start frequency, the drive will not start and will remain in the standby state.

The start frequency hold time does not take effect during the forward/reverse switching process.

The start frequency hold time is not included in the acceleration time but is included in the runtime of the simple PLC.

Example 1:

P0-03 = 0 (Frequency source is digital setting)

P0-08 = 2.00Hz (Digital set frequency is 2.00Hz)

P6-03 = 5.00Hz (Start frequency is 5.00Hz)

P6-04 = 2.0s (Start frequency hold time is 2.0s)

In this case, the drive will be in the standby state with an output frequency of 0.00Hz.

Example 2:

P0-03 = 0 (Frequency source is digital setting)

P0-08 = 10.00Hz (Digital set frequency is 10.00Hz)

P6-03 = 5.00Hz (Start frequency is 5.00Hz)

P6-04 = 2.0s (Start frequency hold time is 2.0s)

In this case, the drive will accelerate to 5.00Hz, maintain this frequency for 2.0s, and then accelerate to the set frequency of 10.00Hz.

P6-05	Start DC Braking Current/Pre-Excitation Current	default value	0%
	setting range	0%~100%	
P6-06	Start DC Braking Time/Pre-Excitation Time	default value	0.0s
	setting range	0.0s~100.0s	

Start DC braking is generally used to stop a running motor before restarting it. Pre-excitation is used to establish the magnetic field of an asynchronous motor before startup to improve the response speed.

Start DC braking is only effective when the start method is direct start. In this case, the drive first applies DC braking at the set start DC braking current and starts running after the set start DC braking time. If the DC braking time is set to 0, the drive starts directly without DC braking. A larger DC braking current results in a stronger braking force.

If the start method is asynchronous motor pre-excitation start, the drive first establishes the magnetic field at the set pre-excitation current and starts running after the set pre-excitation time. If the pre-excitation time is set to 0, the drive starts directly without the pre-excitation process.

The start DC braking current/pre-excitation current has two scenarios relative to the base value:

When the motor's rated current is less than or equal to 80% of the drive's rated current, the base value is relative to the motor's rated current as a percentage.

When the motor's rated current is greater than 80% of the drive's rated current, the base value is relative to 80% of the drive's rated current as a percentage.

P6-07	Accel/Decel Mode	default value	0
	setting range	0: Linear Accel/Decel 1: S-Curve Accel/Decel A 2: S-Curve Accel/Decel B	

Choose the method for the drive to change the frequency during startup and stopping:

0: Linear acceleration/deceleration

The output frequency increases or decreases linearly. The A(E) series provides 4 acceleration/deceleration times, which can be selected through multifunctional digital input terminals (P4-00~P4-08).

1: S-curve acceleration/deceleration A

The output frequency increases or decreases in an S-curve. S-curve acceleration/deceleration is used in applications requiring a gentle start or stop, such as elevators and conveyor belts. Function codes P6-08 and P6-09 respectively define the time ratios of the starting and ending segments of the S-curve acceleration/deceleration.

2: S-curve acceleration/deceleration B

In this S-curve acceleration/deceleration B, the motor's rated frequency fb is always the inflection point of the S-curve, as shown in the figure below. It is generally used in applications requiring rapid acceleration/deceleration in the high-speed region above the rated frequency.

When the set frequency is above the rated frequency, the acceleration/deceleration time is calculated as follows:

Where f is the set frequency, fb is the motor's rated frequency, and T is the time to accelerate from 0 frequency to the rated frequency fb.

P6-08	S-Curve Start Segment Time Proportion	default value	30.0%
	setting range	0.0%~(100.0%-P6-09)	
P6-09	S-Curve End Segment Time Proportion	default value	30.0%
	setting range	0.0%~(100.0%-P6-08)	

Function codes P6-08 and P6-09 respectively define the time ratios of the starting and ending segments of the S-curve acceleration/deceleration A. The sum of these two function codes must satisfy: P6-08 + P6-09 ≤ 100.0%.

In the figure below, t1 is the time defined by parameter P6-08, during which the slope of the output frequency change gradually increases. t2 is the time defined by parameter P6-09, during which the slope of the output frequency change gradually decreases to 0. Between t1 and t2, the slope of the output frequency change is fixed, i.e., linear acceleration/deceleration occurs in this interval.

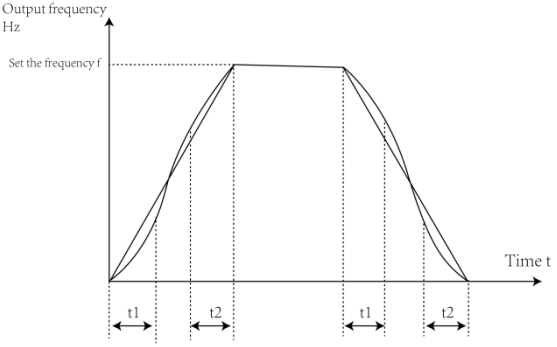

S curve acceleration and deceleration diagram

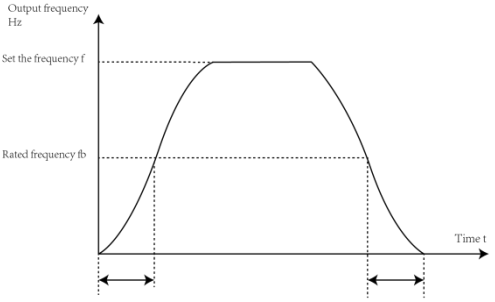

S curve acceleration and deceleration diagram

P6-10	Stop Mode	default value	0
	setting range	0: Deceleration Stop 1: Free Stop	

0: Deceleration Stop

After the stop command is effective, the drive reduces the output frequency according to the deceleration time and stops when the frequency reaches 0.

1: Free Stop

After the stop command is effective, the drive immediately terminates the output, and the motor stops freely according to mechanical inertia.

P6-11	Stop DC Braking Start Frequency	default value	0.00Hz
	setting range	0.00Hz~Maximum Frequency	
P6-12	Stop DC Braking Wait Time	default value	0.0s
	setting range	0.0s~36.0s	
P6-13	Stop DC Braking Current	default value	0%
	setting range	0%~100%	
P6-14	Stop DC Braking Time	default value	0.0s
	setting range	0.0s~36.0s	

Stop DC braking start frequency: During the deceleration stop process, when the running frequency decreases to this frequency, the DC braking process starts.

Stop DC braking wait time: After the running frequency decreases to the stop DC braking start frequency, the drive first stops the output for a period and then starts the DC braking process. This is used to prevent faults such as overcurrent that may be caused by starting DC braking at a relatively high speed.

Stop DC braking current: The parking DC braking current has two scenarios relative to the base value:

When the motor's rated current is less than or equal to 80% of the drive's rated current, the base value is relative to the motor's rated current as a percentage.

When the motor's rated current is greater than 80% of the drive's rated current, the base value is relative to 80% of the drive's rated current as a percentage.

Stop DC braking time: The duration for which the DC braking quantity is maintained. If this value is 0, the DC braking process is canceled. The stop DC braking process is shown in the figure below.

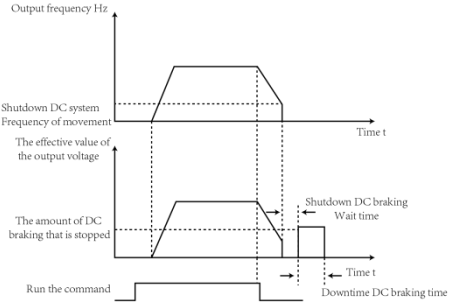

Stop DC Braking Current Diagram

P6-15	Braking Utilization Rate	default value	100%
	setting range	0%~100%	

This is only valid for drives with built-in braking units.

Used to adjust the duty cycle of the braking unit. A higher braking duty cycle results in stronger braking effects but may cause larger fluctuations in the drive's DC bus voltage during the braking process.

P6-16	Braking Resistor Voltage Activation Point	default value	Model-dep
	setting range	200.0V~2000.0v	

The starting voltage Vbreak for the built-in braking unit to operate. The setting of this voltage value should refer to: 800 ≥ Vbreak ≥ (1.414Vs + 30)

Vs: The AC power supply voltage input to the drive.

Note: Improper setting of this voltage may cause the built-in braking unit to operate abnormally!

P6-18	Speed Tracking Current Magnitude	default value	Model-dep
	setting range	30%~200%	

The maximum current during the speed tracking process is limited within the "speed tracking current" setting value. If the setting value is too small, the speed tracking effect will deteriorate.

P6-19	Speed Tracking Closed-Loop Current KP	default value	500
	setting range	10~1000	
P6-20	Speed Tracking Closed-Loop Current KI	default value	800
	setting range	5~1000	
P6-21	Speed Tracking Voltage Rise Time	default value	1.0
	setting range	0~3.0	

P6-22	Demagnetization Time	default value	1.00
	setting range	0~5.00	

Set the closed-loop current proportion and integral gain for speed tracking, the voltage rise time and demagnetization time for speed tracking, and the demagnetization time when starting in vector mode (P6-00=1). When the motor has residual magnetism, starting the inverter is not allowed. If the demagnetization time P6-22 is set too small, it may easily cause an overvoltage fault.

The demagnetization time is the minimum interval between stopping and starting. This Function code only takes effect when the speed tracking function is enabled. If the setting value is too small, it may easily cause an overvoltage fault.

P7 Group: Keyboard and Display

I. Function Parameter P7-00: Frequency Modulation Resolution Selection

Function code	Name	setting range	default value	Change
P7-00	Knob Frequency Adjustment Resolution Selection	0:0.01Hz 1:0.1Hz 2:1Hz 3:10Hz	2	☆

Modify the resolution of frequency adjustment using the keyboard encoder by modifying P7-00.

P7-01	JOG/QUICK Key Function Selection	default value	3
	setting range	0: Menu Mode Switch 1: Switch Between Operation Panel Command Channel and Remote Command Channel (Terminal or Communication) 2: Forward/Reverse Switch 3: Forward Jog 4: Reverse Jog	
P7-02	STOP/RESET Key Function	default value	1
	setting range	0: STOP/RESET Key Stop Function Valid Only in Keypad Mode 1: STOP/RESET Key Stop Function Valid in Any Mode	
P7-03	LED Running Display Parameter 1	default value	1F

	setting range	0000~FFFF Bit00: Running Frequency (Hz) Bit01: Set Frequency (Hz) Bit02: Bus Voltage (V) Bit03: Output Voltage (V) Bit04: Output Current (A) Bit05: Output Power (kW) Bit06: Output Torque (%) Bit07: DI Input State Bit08: DO Output State Bit09: AI1 Voltage (V) Bit10: AI2 Voltage (V) Bit11: AI3 Voltage (V) Bit12: Count Value Bit13: Length Value Bit14: Load Speed Display Bit15: PID Setting	When it is necessary to display the above parameters during operation, set the corresponding bit to 1. Convert this binary number to hexadecimal and set it as P7-03.
P7-04	LED Running Display Parameter 2	default value	0
	setting range	0000~FFFF Bit00: PID Feedback Bit01: PLC Stage Bit02: PULSE Input Pulse Frequency (kHz) Bit03: Running Frequency 2 (Hz) Bit04: Remaining Run Time Bit05: AI1 Voltage Before Correction (V) Bit06: AI2 Voltage Before Correction (V) Bit07: AI3 Voltage Before Correction (V) Bit08: Motor Speed Bit09: Current Power-On Time (Hour) Bit10: Current Run Time (Min) Bit11: PULSE Input Pulse Frequency (Hz) Bit12: Communication Setting Value Bit13: Encoder Feedback Speed (Hz) Bit14: Main Frequency X Display (Hz) Bit15: Aux Frequency Y Display (Hz)	When it is necessary to display the above parameters during operation, set the corresponding bit to 1. Convert this binary number to hexadecimal and set it as P7-04。

Running Display Parameters: Used to set the parameters that can be viewed when the drive is in the running state.

Up to 32 status parameters can be viewed. The status parameters to be displayed are selected based on the binary bits of parameters P7-03 and P7-04. The display order starts from the least significant bit of P7-03.

P7-05	LED Stop Display Parameter		default value	0
	setting range	0000~FFFF	0000~FFFF Bit00: Set Frequency (Hz) Bit01: Bus Voltage (V) Bit02: DI Input State Bit03: DO Output State Bit04: AI1 Voltage (V) Bit05: AI2 Voltage (V) Bit06: AI3 Voltage (V) Bit07: Count Value	

			Bit08: Length Value Bit09: PLC Stage Bit10: Load Speed Bit11: PID Setting Bit12: PULSE Input Pulse Frequency (kHz)	
			When it is necessary to display the above parameters during off status, set the corresponding bit to 1. Convert this binary number to hexadecimal and set it as P7-05。	
P7-06	Load Speed Display Coefficient		default value	1.0000
	setting range		0 .0001~6.5000	

When it is necessary to display the load speed, adjust the correspondence between the drive's output frequency and the load speed through this parameter. Refer to the description of P7-12 for the specific correspondence relationship.

P7-07	Inverter Module Heatsink Temperature	default value	0
	setting range	0.0℃~100.0℃	

Display the temperature of the IGBT in the inverter module.

The over-temperature protection value for the IGBT in the inverter module varies among different drive models.

P7-08	Accumulate run time	default value	0h
	setting range	0h~65535h	

Display the cumulative operating time of the drive, which cannot be reset.

P7-09	Cumulative Run Time	default value	0h
	setting range	0h~65535h	

Display the cumulative operating time of the drive. When the operating time reaches the set operating time P8-17, the drive's multifunctional digital output function (12) outputs an ON signal.

P7-10	Product Number		default value	
	setting range		Drive Product Number	
P7-11	Software Version Number		default value	
	setting range		Control panel Software Version Number	
P7-12	Load Speed Display Decimal Places		default value	21
	setting range	20	0 Decimal Places	
		21	1 Decimal Places	

		22	2 Decimal Places
		23	3 Decimal Places

Used to set the number of decimal places for the load speed display. Below is an example to illustrate the calculation method of the load speed:

If the load speed display coefficient P7-06 is 2.000 and the number of decimal places for the load speed P7-12 is 2 (2 decimal places), when the drive's running frequency is 40.00Hz, the load speed is: 40.00 * 2.000 = 80.00 (displayed with 2 decimal places). If the drive is in the standby state, the load speed is displayed as the speed corresponding to the set frequency, i.e., the "set load speed". Taking a set frequency of 50.00Hz as an example, the load speed in the standby state is: 50.00 * 2.000 = 100.00 (displayed with 2 decimal places).

P7-13	Cumulative Power-On Time	default value	0h
	setting range	0h~65535h	

Display the cumulative power-on time of the drive since leaving the factory.

When this time reaches the set power-on time (P8-17), the drive's multifunctional digital output function (24) outputs an ON signal.

P7-14	Cumulative Power Consumption	default value	-
	setting range	0~65535kWh	

Display the cumulative power consumption of the drive up to the present.

P7-17	Second Row LED Display Parameter	default value	0
	setting range	0-16 0: Running Frequency (Hz) 1: Set Frequency (Hz) 2: Bus Voltage (V) 3: Output Voltage (V) 4: Output Current (A) 5: Output Power (kW) 6: Output Torque (%) 7: DI Digital Input Terminal Input State 8: DO Output State	9: AI1 Voltage (V) 10: AI2 Voltage (V) 11: AI3 Voltage (V) 12: Count Value 13: Length Value 14: Load Speed Display 15: PID Setting 16: PID Feedback

Auxiliary Monitoring LED Display Parameters

P7-18	UP/DOWN Effective Variable Display Selection	0: Set Variable 1: Current Variable Note: Whether UP/DOWN modification switches the current display variable to the set variable		

P8 Group - Auxiliary Functions

P8-00	Jog Running Frequency	default value	2 .00Hz
	setting range	0.00Hz~Maximum Frequency	
P8-01	Jog Acceleration Time	default value	20.0s
	setting range	0.0s~6500.0s	
P8-02	Jog Deceleration Time	default value	20.0s
	setting range	0.0s~6500.0s	

Define the given frequency and acceleration/deceleration times of the drive during jogging operation.

During jogging operation, the start-up mode is fixed as direct start-up (P6-00 = 0), and the stop mode is fixed as deceleration stop (P6-10 = 0).

P8-03	Acceleration Time 2	default value	20.0s
	setting range	0.0s~6500.0s	

Define the given frequency and acceleration/deceleration times of the drive during jogging operation.

During jogging operation, the start-up mode is fixed as direct start-up (P6-00 = 0), and the stop mode is fixed as deceleration stop (P6-10 = 0).

P8-04	Deceleration Time 2	default value	20.0s
	setting range	0.0s~6500.0s	
P8-05	Acceleration Time 3	default value	20.0s
	setting range	0.0s~6500.0s	
P8-06	Deceleration Time 3	default value	20.0s
	setting range	0.0s~6500.0s	
P8-07	Acceleration Time 4	default value	20.0s
	setting range	0.0s~6500.0s	
P8-08	Deceleration Time4	default value	20.0s
	setting range	0.0s~6500.0s	

Four sets of acceleration/deceleration times are provided, namely P0-17/P0-18 and the above three sets of acceleration/deceleration times.

The definitions of the four sets of acceleration/deceleration times are identical. Please refer to the relevant descriptions of P0-17 and P0-18.

By combining different states of the multifunctional digital input Terminal DI, the four sets of acceleration/deceleration times can be switched. For specific usage methods, please refer to the relevant descriptions in Function codes P4-01~P4-05.

P8-09	Jump Frequency 1	default value	0.00Hz
	setting range	0.00Hz~ Max Frequency	
P8-10	Jump Frequency 2	default value	0.00Hz
	setting range	0.00Hz~Max Frequency	
P8-11	Jump Frequency Amplitude	default value	0.00Hz
	setting range	0.00~Max Frequency	

When the set frequency is within the skip frequency range, the actual operating frequency will run at the skip frequency closer to the set frequency. By setting skip frequencies, the drive can avoid the mechanical resonance points of the load.

Two skip frequency points can be set. If both skip frequencies are set to 0, the skip frequency function is canceled.

For a schematic diagram of the skip frequency and skip frequency amplitude principles, please refer to the following figure.

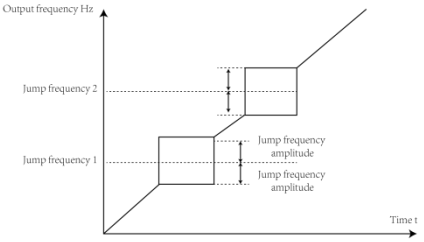

Skip frequency figure

P8-12	Forward/Reverse Dead Band Time	default value	0.00s
	setting range	0.00s~3000.0s	

Set the transition time at 0 Hz during the forward-reverse transition process of the drive, as shown in the following diagram:

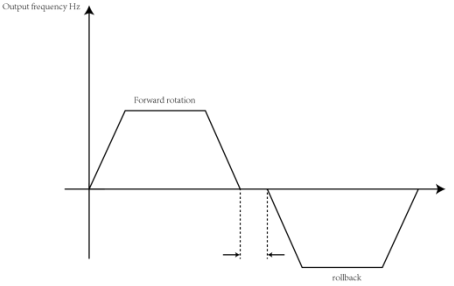

Forward/Reverse Dead Band Time diagram

P8-13	Reverse Control Enable		default value	0
	setting range	0	allow	
		1	forbid	

Through this parameter, set whether the drive is allowed to operate in the reverse state. In applications where motor reversal is not allowed, set P8-13 = 1.

P8-14	Operation Mode When Frequency Below Lower Limit		default value	0
	setting range	0	Run at Lower Limit Freq	
		1	Stop	
		2	Zero Speed Operation	

When the set frequency is lower than the lower limit frequency, the operating state of the drive can be selected through this parameter. The A(E) series provides three operating modes to meet various application needs.。

P8-15	Droop Control	default value	0.00Hz
	setting range	0.00Hz~10.00Hz	

This function is generally used for load distribution when multiple motors drive the same load.

Droop control means that as the load increases, the output frequency of the drive decreases. In this way, when multiple motors drive the same load, the motor with a more significant decrease in output frequency will have a reduced load, achieving uniform load distribution among multiple motors. This parameter refers to the frequency drop value of the drive when outputting rated load.

P8-16	Set Power-on Cumulative Time	default value	0h
	setting range	0h~65000h	

When the cumulative power-on time (P7-13) reaches the power-on time set in P8-16, the multifunctional digital DO of the drive outputs an ON signal. Below is an example of its application:

Example: Combine with the Virtual DI/DO function to realize that when the set power-on time reaches 100 hours, the drive outputs a fault alarm.

Solution:

Set the Virtual DI1 Terminal function to user-defined fault 1: H1-00 = 44;

Set the effective state of the Virtual DI1 Terminal to be sourced from Virtual DO1: H1-05 = 0000;

Set the Virtual DO1 function to power-on time reached: H1-11 = 24;

Set the cumulative power-on arrival time to 100 hours: P8-16 = 100.

Then, when the cumulative power-on time reaches 100 hours, the drive outputs Err27 as a fault.

P8-17	Set Operation Cumulative Time	default value	0h
	setting range	0h~65000h	

Used to set the operating time of the drive.

When the cumulative operating time (P7-09) reaches the set operating time, the multifunctional digital DO of the drive outputs an ON signal.

P8-18	Startup Protection Selection	default value	0
	setting range 0	No Protection	
	setting range 1	Protection	

This parameter is related to the safety protection function of the drive.

If this parameter is set to 1, and the run command is valid at the moment of drive power-on (for example, the Terminal run command is in the closed state before power-on), the drive will not respond to the run command. The run command must be withdrawn once, and then when the run command becomes valid again, the drive will respond. In addition, if this parameter is set to 1, and the run command is valid at the moment of drive fault reset, the drive will also not respond to the run command. The run command must be withdrawn to eliminate the run protection state.

Setting this parameter to 1 can prevent the motor from responding to the run command during power-on or fault reset without awareness, thus avoiding potential dangers.

P8-19	Frequency Detection Value (FDT1)	default value	50.00Hz
	setting range	0.00Hz~Max Frequency	
P8-20	Frequency Detection Hysteresis (FDT1)	default value	50%

	setting range	0.0%~100.0%(of FDT1 level)

When the operating frequency is higher than the frequency detection value, the multifunctional output DO of the drive outputs an ON signal. When the frequency is lower than the detection value by a certain frequency value, the DO output ON signal is canceled.

The above parameters are used to set the detection value of the output frequency and the hysteresis value for canceling the output action. Among them, P8-20 is the percentage of the hysteresis frequency relative to the frequency detection value P8-19. The following figure is a schematic diagram of the FDT function.

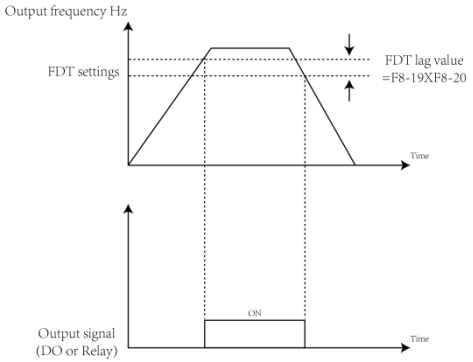

Schematic diagram of FDT levels

P8-21	Frequency Arrival Detection Width	default value	0.0%
	setting range	0.00~100%(of Max Frequency)	

When the operating frequency of the drive is within a certain range of the target frequency, the multifunctional DO of the drive outputs an ON signal.

This parameter is used to set the detection range for frequency arrival. It is a percentage relative to the Maximum Frequency.

The following figure is a schematic diagram of frequency arrival detection:

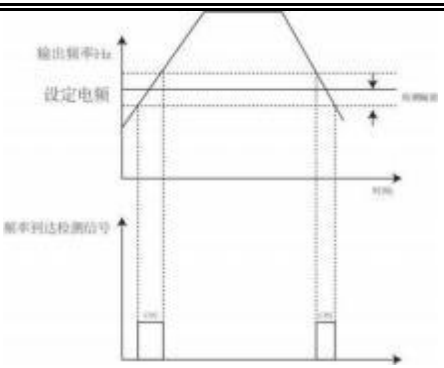

Frequency Arrival Detection Width diagram

P8-22	Jump Frequency Validity During Accel/Decel	default value	0
	setting range	0：Invalid	

This Function code is used to set whether the skip frequency is valid during acceleration and deceleration.

When set to valid, when the operating frequency is within the skip frequency range, the actual operating frequency will skip the set skip frequency boundaries. The following figure is a schematic diagram of the skip frequency being valid during acceleration and deceleration.

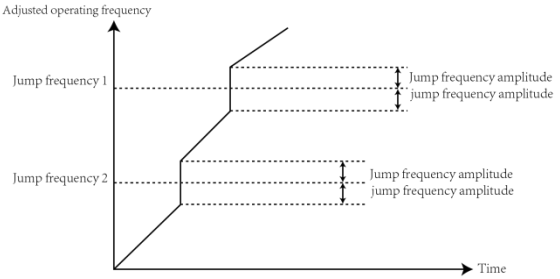

Jump Frequency Validity During Accel/Dece diagram

This function is valid when the motor is selected as Motor 1 and the acceleration/deceleration time is not switched through the DI digital input Terminal. It is used to automatically select different acceleration/deceleration times during the drive operation according to the operating frequency range without using the DI digital input Terminal.

P8-25	Accel Time1/Accel Time2 Switch Frequency	default value	0.00 Hz
	setting range	0 . 00 Hz~ Max Frequency	
P8-26	Decel Time1/Decel Time2 Switch Frequency	default value	0.00 Hz
	setting range	0 . 00 Hz~ Max Frequency	

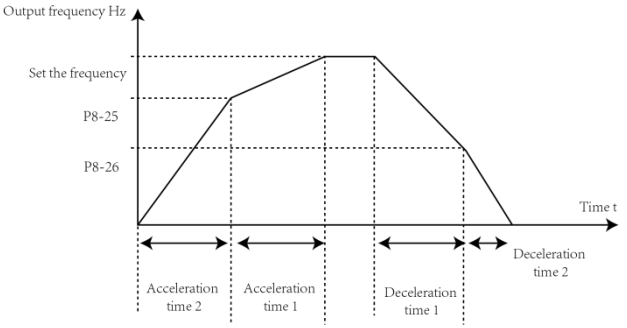

Accel Time1/Accel Time2 Switch Frequency diagram

The above figure is a schematic diagram of acceleration/deceleration time switching. During acceleration, if the operating frequency is less than P8-25, Acceleration Time 2 is selected; if the operating frequency is greater than P8-25, Acceleration Time 1 is selected.

During deceleration, if the operating frequency is greater than P8-26, Deceleration Time 1 is selected; if the operating frequency is less than P8-26, Deceleration Time 2 is selected.

P8-27	Terminal Jog Priority	default value	0
	setting range	0: Invalid 1: Valid 2: Invalid during running then decel stop	

This parameter is used to set whether the Terminal jogging function has the highest priority.

When Terminal jogging priority is valid, if a Terminal jogging command appears during operation, the drive switches to the Terminal jogging operating state.

Name	**setting range**	**default value**	change
Terminal Jog Priority	0：jog priority invalid 1：jog priority valid 2：jog mode 2 selection	0	☆

After selecting Jog Mode 2, jogging priority is limited. Under the condition that the external Terminal run is valid, after releasing the jogging, the frequency converter stops. The jogging stop mode can be set according to P6-10, and the free stop mode is accepted.

P8-28	Frequency Detection Value (FDT2)	default value	50.00Hz
	setting range	0.00Hz~Max Frequency	
P8-29	Frequency Detection Hysteresis (FDT2)	default value	5.0
	setting range	0.0%~100.0%(of FDT2 level)	

This frequency detection function is completely identical to the FDT1 function. Please refer to the relevant descriptions of FDT1, that is, Function codes P8-19 and P8-20.

P8-30	Arbitrary Frequency Detection Value 1	default value	50.00Hz
	setting range	0.00Hz~Max Frequency	
P8-31	Arbitrary Frequency Detection Width 1	default value	0.0%
	setting range	0.0%~100.0%(Max Frequency)	
P8-32	Arbitrary Frequency Detection Value 2	default value	50 .00Hz
	setting range	0.00Hz~Max Frequency	
P8-33	Arbitrary Frequency Detection Width 2	default value	0.0%
	setting range	0.0%~100.0%(Max Frequency)	

When the output frequency of the drive is within the positive and negative detection amplitude range of any arrival frequency detection value, the multifunctional DO outputs an ON signal. Two sets of parameters for any arrival frequency detection are provided, which are used to set the frequency value and the frequency detection range. The following figure is a schematic diagram of this function.

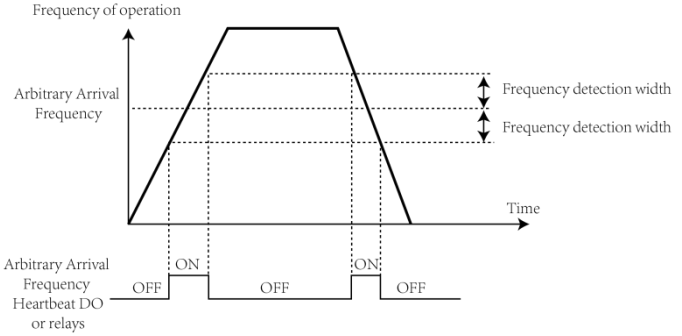

Arbitrary Frequency diagram

P8-34	Zero Current Detection Level	default value	5.0%
	setting range	0.0%~300.0%(Motor Rated Current)	
P8-35	Zero Current Detection Delay Time	default value	0.10s
	setting range	0.00s~600.00s	

When the output current of the drive is less than or equal to the zero-current detection level and the duration exceeds the zero-current detection delay time, the multifunctional DO of the drive outputs an ON signal. The following figure is a schematic diagram of zero-current detection.

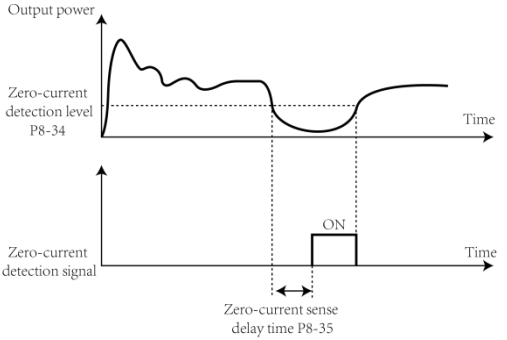

P8-36	Output Current Overlimit Value	default value	200 .0%
	setting range	0.0% (No Detection) 0.1%~300.0% (Motor Rated Current)	
P8-37	Output Current Overlimit Detection Delay	default value	0.00s
	setting range	0 .00s~600 .00s	

When the output current of the drive is greater than or exceeds the overcurrent detection point and the duration exceeds the software overcurrent point detection delay time, the multifunctional DO of the drive outputs an ON signal. The following figure is a schematic diagram of the output current overlimit function.

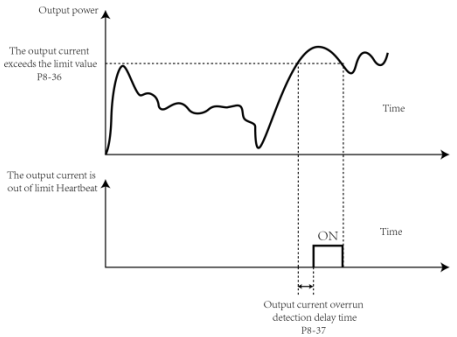

P8-38	Arbitrary Current Detection 1	default value	100.0%
	setting range	0.0%~300.0%(Motor Rated Current)	
P8-39	Arbitrary Current Detection Width 1	default value	0.0%
	setting range	0.0%~300.0%(Motor Rated Current)	
P8-40	Arbitrary Current Detection 2	default value	100.0%
	setting range	0.0%~300.0%(Motor Rated Current)	
P8-41	Arbitrary Current Detection Width 2	default value	0.0%

	setting range	0.0%~300.0%(Motor Rated Current)

When the output current of the drive is within the set positive and negative detection width of any arrival current, the multifunctional DO of the drive outputs an ON signal. Two sets of parameters for any arrival current and detection width are provided. The following figure is a schematic diagram of this function.

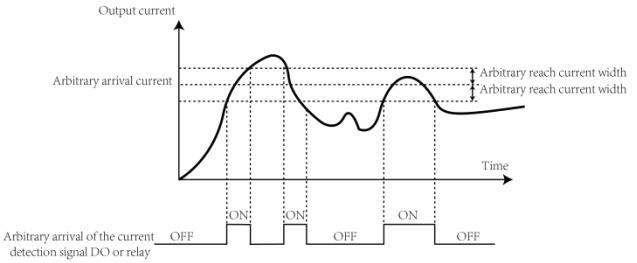

Arbitrary Current Detection diagram

P8-42	Timer Function Selection		default value	0
	setting range	0	Disabled	
		1	Enabled	
P8-43	Timer Operation Time Selection		default value	0
	setting range	0	P8-44Setting	
		1	AI1	
		2	AI2	
		3	AI3	
		Analog input 100%=P8-44		
P8-44	Timer Operation Time		default value	0 .0Min
	setting range		0.0Min~6500.0Min	

This group of parameters is used to implement the timer operation function of the drive.

When the P8-42 timer function selection is valid, the drive starts timing when it is started. After reaching the set timer operation time, the drive automatically stops, and at the same time, the multifunctional DO outputs an ON signal.

Each time the drive is started, it starts timing from 0. The remaining timer operation time can be viewed through U0-20.

The timer operation time is set by P8-43 and P8-44, with the time unit being minutes.

P8-45	AI1 Input Voltage Protection Lower Limit	default value	3.10V
	setting range	0.00V~P8-46	

P8-46	AI1 Input Voltage Protection Upper Limit	default value	6.80V
	setting range	P8-45~10.00V	

When the value of the analog input AI1 is greater than P8-46 or less than P8-45, the multifunctional DO of the drive outputs an "AI1 input overlimit" ON signal to indicate whether the input voltage of AI1 is within the setting range.

P8-47	Module Overtemperature Threshold	default value	75℃
	setting range	0.00V~P8-46	

When the inverter heat sink temperature reaches this temperature, the multifunctional DO of the drive outputs a "module temperature reached" ON signal.

P8-48	Cooling Fan Control	default value	0
	setting range	0：Run with motor	

Used to select the operating mode of the cooling fan. When set to 0, the fan operates when the drive is in the running state. When the drive is in the stopped state, if the heat sink temperature is higher than 40 degrees, the fan operates; when the heat sink temperature is lower than 40 degrees, the fan does not operate.

When set to 1, the fan operates continuously after power-on.

P8-53	Current Operation Time Setting	default value	0.0Min
	setting range	0.0Min~6500.0Min	

When the operating time of this start-up reaches this time, the multifunctional digital DO of the drive outputs a "this operating time reached" ON signal.。

P9 Group Error and Production

P9-00	Motor Overload Protection		default value	1
	setting range	0	Disabled	
		1	Enabled	
P9-01	Motor Overload Protection Gain		default value	01
	setting range		0.20~10.00	

P9-00=0: There is no motor overload protection function, which may lead to the risk of motor overheating and damage. It is recommended to install a thermal relay between the drive and the motor.

P9-00=1: In this case, the drive judges whether the motor is overloaded based on the inverse-time limit curve of motor overload protection.

The inverse-time limit curve for motor overload protection is as follows: 220% × (P9-01) × the rated current of the motor, and an overload fault alarm will be triggered if this condition lasts for 1 minute; 150% × (P9-01) × the rated current of the motor, and an overload fault alarm will be triggered if this condition lasts for 60 minutes.

Users need to correctly set the value of P9-01 according to the actual overload capacity of the motor.

Setting this parameter too large may lead to the risk of motor overheating and damage without triggering an alarm from the drive.

P9-02	Motor Overload Warning Coefficient	default value	80%
	setting range	50%~100%	

This function is used to provide a warning signal to the control system through the DO (Digital Output) before a motor overload fault occurs. The warning coefficient is used to determine the extent to which the warning is issued before motor overload protection. The larger the value, the smaller the warning lead time.

When the cumulative output current of the drive exceeds the product of the inverse-time limit curve and P9-02, the drive's multifunctional digital DO outputs an "ON" signal for "motor overload pre-warning".

P9-03	Overvoltage Stall Gain	default value	30
	setting range	0~100	
P9-04	Overvoltage Stall Protection Voltage	default value	760
	setting range	636~795(3 phase)	

During the deceleration process of the drive, when the DC bus voltage exceeds the overvoltage stall protection voltage, the drive stops decelerating and maintains the current operating frequency. It continues decelerating after the bus voltage drops.

The overvoltage stall gain is used to adjust the drive's ability to suppress overvoltage during deceleration. A larger value indicates stronger overvoltage suppression ability. Under the premise of no overvoltage occurrence, this gain should be set as small as possible.

For loads with small inertia, the overvoltage stall gain should be small; otherwise, the system's dynamic response will slow down. For loads with large inertia, this value should be large; otherwise, the suppression effect will be poor, and overvoltage faults may occur. When the overvoltage stall gain is set to 0, the overvoltage stall function is canceled.

The overvoltage stall protection voltage setting values are as follows:

Voltage	Overvoltage Stall Protection Voltage value
Single phase 220V	416V
3 phase 220V	416V
3 phase 380V	760V
3 phase 480V	889V

P9-05	Overcurrent Stall Gain	default value	20
	setting range	0~100	
P9-06	Overcurrent Stall Protection Current	default value	150%
	setting range	100%~200%	

Overcurrent Stall: When the drive's output current reaches the set overcurrent stall protection current (P9-06), the drive reduces the output frequency during acceleration, constant-speed operation, and deceleration until the current is lower than the overcurrent stall protection current (P9-06), after which the operating frequency returns to normal.

Overcurrent Stall Protection Current: This is the current protection point for selecting the overcurrent stall function. It is expressed as a percentage of the motor's rated current. The drive starts executing the overcurrent stall protection function when this parameter value is exceeded.

Overcurrent Stall Gain: This is used to adjust the drive's ability to suppress overcurrent during acceleration and deceleration. A larger value indicates stronger overcurrent suppression ability. Under the premise of no overcurrent occurrence, this gain should be set as small as possible.

For loads with small inertia, the overcurrent stall gain should be small; otherwise, the system's dynamic response will slow down. For loads with large inertia, this value should be large; otherwise, the suppression effect will be poor, and overcurrent faults may occur. In applications with very small inertia, it is recommended to set the overcurrent suppression gain to less than 20. When the overcurrent stall gain is set to 0, the overcurrent stall function is canceled.

P9-07	Ground Fault Protection	default value	11
	setting range	Bit0: Pre-power Ground Fault Check (0, 1) Bit1: Runtime Ground Fault Check	

It is possible to select whether the drive detects motor grounding short circuits upon power-up or before operation.

If this function is enabled, the drive's UVW terminals will have voltage output for a certain period after power-up or before operation.

P9-08	V/F Weak Magnetic Zone Current Limit	default value	200%
	setting range	50%~300%	

In the high-speed weak magnetic region, the motor's driving current is relatively small. Compared to below the rated frequency, for the same stall current, the motor's speed drop is significant. To improve the motor's operating characteristics, the stall action current above the rated frequency can be reduced. In applications such as centrifuges that require high operating frequencies, several times the weak magnetic field, and large load inertia, this method has a good effect on acceleration performance.

The transition stall action current above the rated frequency = (fs/fn) * k * LimitCur; where fs is the operating frequency, fn is the motor's rated frequency, k is the "V/F weak magnetic region speed doubling current limit coefficient" (P9-08), and LimitCur is the "overcurrent stall action current" (P9-06).

P9-09	Auto Fault Reset Count	default value	0
	setting range	0~20	

When the drive selects automatic fault reset, this setting is used to determine the number of automatic resets allowed. After exceeding this number, the drive maintains the fault state.

P9-10	DO Action During Auto Reset	default value	1
	setting range	0: No Action, 1: Action	

If the drive has the automatic fault reset function enabled, whether the fault DO (Digital Output) acts during the automatic fault reset period can be set through P9-10.

P9-11	Auto Fault Reset Interval	default value	1.0s
	setting range	0.1s~100.0s	

The waiting time between the drive's fault alarm and automatic fault reset.

P9-12	Input Phase Loss/Contactor Protection	default value	11
	setting range	Bit0: Input Phase Loss (0, 1) Bit1: Contactor Check	

Select whether to protect against input phase loss or contactor engagement.

Only drive models with a power rating of 30KW or above have input phase loss protection. Models below this power rating have no input phase loss protection function regardless of whether P9-12 is set to 0 or 1.

P9-13	Output Phase Loss Protection	default value	1
	setting range	0: Off, 1: On	

Select whether to protect against output phase loss.

P9-14	First Fault Type	0~99
P9-15	Second Fault Type	
P9-16	Second Fault Type	

Record the drive's last three fault types, with 0 indicating no fault. For possible causes and solutions of each fault code, please refer to the relevant descriptions in Chapter 8.

P9-17	Third Fault Frequency	Latest Fault frequency
P9-18	Third Fault Current	Latest Fault current
P9-19	Third Fault DC Bus Voltage	Latest Fault DC Bus Voltage
P9-20	Third Fault Input Terminal Status	latest fault digital input Terminal status，the sequence as below BIT9 BIT8 BIT7 BIT6 BIT5 BIT4 BIT3 BIT2 BIT1 BIT0 DI10 DI9 DI8 DI7 DI6 DI5 DI4 DI3 DI2 DI1 When input Terminal is ON and its binary is 1,off as 0, allDI status change to decimal display.
P9-21	Third Fault Output Terminal Status	latest fault digital input Terminal status，the sequence as below BIT4 BIT3 BIT2 BIT1 BIT0 DO2 DO1 REL2 REL1 FMP When input Terminal is ON and its binary is 1,off as 0, allDI status change to decimal display.
P9-22	Third Fault Inverter Status	reserve
P9-23	Third Fault Power-on Time	Last power-on time at the time of the latest fault
P9-24	Third Fault Operation Time	Last power-on time at the time of the latest fault
P9-27	Second Fault Frequency	
P9-28	Current at Second Fault	
P9-29	DC Bus Voltage at Second Fault	
P9-30	Input Terminal Status at Second Fault	
P9-31	Output Terminal Status at Second Fault	

P9-32	Inverter Status at Second Fault		
P9-33	Power-On Time at Second Fault		
P9-34	Runtime at Second Fault		
P9-37	Frequency at First Fault	Same as P9-17~P9-24	
P9-38	Current at First Fault		
P9-39	DC Bus Voltage at First Fault		
P9-40	Input Terminal Status at First Fault		
P9-41	Output Terminal Status at First Fault		
P9-42	Inverter Status at First Fault		
P9-43	Power-On Time at First Fault		
P9-44	Runtime at First Fault		
P9-47	Fault Protection Action 1	default value	00000
	setting range	Units digit	Motor Overload (11)
		0	Free stop
		1	Stop via stop method
		2	Continue running
		10 place	Input Phase Loss (Err12) (Same as Units Place)
		100 place	output Phase Loss (Err13) (Same as Units Place)
		1000 place	Communication Error (Err16) (Same as Units Place)
		10000 place	Communication Error (Err16) (Same as Units Place)
P9-48	Fault Protection Action 2	default value	00 00
			0
	setting range	Units digit	Encode error (Err20)
		0	Free stop
		1	Switch to V/F,Stop via stop method
		2	Switch to V/F , continue running
		10 place	Function code reading error (Err21)
		0	Free stop
		1	Stop via stop method
		100 place	reserve
		1000 place	Motor over-temp(Err25)(same as F9-47 units place)
		10000 place	Running time arrived (Err26)(same as F9-47 units place)
P9-49	Fault Protection Action 3		2

	setting range	Units digit	10 place
		10 place	0B
		100 place	1
		1000 place	100 place
		0	Free stop
		1	Stop via stop method
		2	Slow down to 7% of the motor's rated frequency and continue running. If there is no overload, automatically recover to the set frequency to run.
		10000 place	PID feedback loss during runtime (Err31) (same as F9-47 units place)
P9-50	Fault Protection Action 4		default value: 00000
	setting range	Units digit	Speed Deviation (Err42)(same as F9-47 units place)
		10 place	Motor over speed(Err43)(same as F9-47 units place)
		100 place	Initial position error (Err51)(same as F9-47 units place)
		1000 place	Speed feedback error (Err52) (same as F9-47 units place)
		10000 place	reserve

When "Free Stop" is selected, the drive displays "Err**" and stops immediately.

When "Stop According to Stop Mode" is selected: The drive displays "A" and stops according to the stop mode. After stopping, it displays "Err".

When "Continue Running" is selected: The drive continues to run and displays "A**". The operating frequency is set by P9-54.

P9-54	Continue Running Frequency Selection		default value: 0
	setting range	0	Current frequency
		1	Set frequency
		2	Upper limit frequency
		3	Lower limit frequency
		4	Backup frequency
P9-55	Backup Frequency		default value: 100.0%
	setting range		60.0%~100.0%

When a fault occurs during the drive's operation and the fault handling method is set to "Continue Running", the drive displays "A**" and operates at the frequency determined by P9-54.

When "Abnormal Backup Frequency Operation" is selected, the value set in P9-55 is a percentage relative to the Maximum Frequency.

P9-56	Motor Temperature Sensor Setup		default value	0
	setting range	0	Without temp sensor	
		1	PT100	
		2	PT1000	
P9-57	Motor Overheat Protection Threshold		default value	110℃
	setting range		0℃~200℃	
P9-58	Motor Overheat Pre-Alarm Threshold		default value	90℃
	setting range		0℃~200℃	

The temperature signal from the motor temperature sensor needs to be connected to the multifunctional input/output expansion card, which is an optional accessory. The analog input AI3 of the expansion card can be used as the input for the motor temperature sensor. The motor temperature sensor signal is connected to AI3 and PGND.

The AI3 analog input end supports both PT100 and PT1000 motor temperature sensors. The sensor type must be correctly set when in use. The motor temperature value is displayed in U0-34.

When the motor temperature exceeds the motor overheating protection threshold P9-57, the drive issues a fault alarm and handles it according to the selected fault protection action method.

When the motor temperature exceeds the motor overheating pre-warning threshold P9-58, the drive's multifunctional digital DO outputs an "ON" signal for "motor overtemperature pre-warning".

P9-59	Instant Power Loss Action		default value	0
	setting range	0	Disabled	
		1	Decelerate	
		2	Decelerate and stop	
P9-60	Voltage Threshold for Pause		default value	85%
	setting range		0.0%~100.0%	
P9-61	Voltage Recovery Time		default value	0.50s
	setting range		0.00s~100.00s	
P9-62	Voltage Threshold for Power Loss		default value	80.0%
	setting range		60.0%~100.0%(of nominal DC bus voltage)	

This function refers to the drive's ability to maintain operation by reducing the output speed and compensating for the drop in the DC bus voltage with the load's regenerative energy during a momentary power outage or sudden voltage drop.

If P9-59=1, during a momentary power outage or sudden voltage drop, the drive decelerates. When the bus voltage returns to normal, the drive accelerates normally to the set frequency. The criterion for judging that the bus voltage has returned to normal is that the bus voltage is normal and the duration exceeds the time set in P9-61. If P9-59=2, during a momentary power outage or sudden voltage drop, the drive decelerates until it stops.

P9-63	Load Loss Protection		default value	0
	setting range	0	Disabled	
		1	Enabled	
P9-64	Load Loss Detection Level	default value	10.0%	
	setting range	0.0%~100.0%(motor rated current)		
P9-65	Load Loss Detection Time	default value	1.0s	
	setting range	0.0s~60.0s		

If the load loss protection function is enabled, when the drive's output current is less than the load loss detection level P9-64 and the duration exceeds the load loss detection time P9-65, the drive's output frequency automatically decreases to 7% of the rated frequency. During the load loss protection period, if the load recovers, the drive automatically resumes operation at the set frequency.

P9-67	Overspeed Detection Threshold	default value	15.0%
	setting range	0.0%~50.0%(f max frequency)	
P9-68	Overspeed Detection Time	default value	1.0s
	setting range	0.0s~60.0s	

This function is only valid when the drive is operating in speed sensor vector control mode.

When the drive detects that the motor's actual speed exceeds the Maximum Frequency by more than the overspeed detection value P9-67 and the duration exceeds the overspeed detection time P9-68, the drive issues a fault alarm "Err43" and handles it according to the fault protection action method.

When the overspeed detection time is 0.0s, the overspeed fault detection is canceled.

P9-69	Speed Deviation Detection Threshold	default value	20.0%
	setting range	0.0%~50.0%(max frequenc)	

P9-70	Speed Deviation Detection Time	default value	5.0s
	setting range	0.0s~60.0s	

This function is only valid when the drive is operating in speed sensor vector control mode.

When the drive detects a deviation between the motor's actual speed and the set frequency that is greater than the speed deviation detection value P9-69 and the duration exceeds the speed deviation detection time P9-70, the drive issues a fault alarm "Err42" and handles it according to the fault protection action method.

When the speed deviation detection time is 0.0s, the speed deviation fault detection is canceled.

P9-74	V/F Overvoltage Suppression Rising Frequency	default value	5Hz
	setting range	5Hz~50Hz	

This parameter affects the overvoltage suppression function during constant-speed operation. Setting this parameter too small may easily lead to overvoltage during constant-speed operation. It is recommended to adjust it within the range of 5~20Hz.

P9-75	Initial Position Fault Enable（synchronous motor）	default value	11
	setting range	Bit 0: Initial Position Fault 0: Disable 1: Enable Bit 10: Loaded Zero Position Angle Tuning Fault 0: Disable 1: Enable	
P9-78	Initial Position Identification Initial Pulse Width Time（synchronous motor）	default value	20
	setting range	5~2000	

These two parameters affect the initial position identification and success of synchronous motors.

PA Group: Process Control PID Function

PID control is a commonly used method in process control. It performs proportional, integral, and differential operations on the difference between the feedback signal and the target signal of the controlled variable. By adjusting the drive's output frequency, a closed-loop system is formed to stabilize the controlled variable at the target value.

It is suitable for process control applications such as flow control, pressure control, and temperature control. The following is a control principle block diagram of process PID.

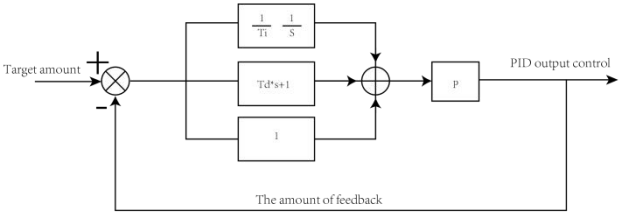

PROCESS PID THEORY DIAGRAM

PA-00	PID Setpoint Source		default value	0
	setting range	0	PA-01Setting	
		1	AI1	
		2	AI2	
		3	AI3	
		4	PULSE Pulse Setting (DI5)	
		5	Communication Given	
		6	Multi-Step Command Given	
		7	Keypad Encoder	
PA-01	PID Digital Setpoint		default value	50.0%
	setting range		0.0%~100.0%	

This parameter is used to select the target value setting channel for process PID.

The set target value for process PID is a relative value, with a setting range of 0.0%~100.0%. Similarly, the PID feedback value is also a relative value. The PID function aims to make these two relative values equal.

PA-02	PID Feedback Source		default value	0
	setting range	0	AI1	
		1	AI2	
		2	AI3	
		3	AI1 — AI2	
		4	PULSE Pulse Setting (DI5)	
		5	Communication Given	
		6	AI1+AI2	
		7	MAX(|AI1|,|AI2|)	
		8	MIN(|AI1|,|AI2|)	

This parameter is used to select the feedback signal channel for process PID.

The PID feedback value is also a relative value, with a setting range of 0.0%~100.0%.

PA-03	PID Action Direction		default value	0
	setting range	0	Positive Action	
		1	Reverse Action	

Positive Action: When the PID feedback signal is less than the set value, the drive's output frequency increases. This is applicable in tension control scenarios for winding up.

Negative Action: When the PID feedback signal is less than the set value, the drive's output frequency decreases. This is applicable in tension control scenarios for unwinding. This function is affected by the "Multifunctional Terminal PID Action Direction Inversion" (Function 35). Care should be taken when using it.

PA-04	PID Setpoint Feedback Range	default value	1000
	setting range	0~65535	

The PID setpoint and feedback ranges are dimensionless units used for PID setpoint display U0 -15 and PID feedback display U0-16.

A PID setpoint and feedback relative value of 100.0% corresponds to the PID setpoint and feedback range PA-04. For example, if PA-04 is set to 2000, when the PID setpoint is 100.0%, the PID setpoint display U0-15 is 2000.

PA-05	Proportional Gain Kp1	default value	20.0
	setting range	0.0~100.0	
PA-06	Integral Time Ti1	default value	2.00s
	setting range	0.01s~10.00s	
PA-07	Derivative Time Td1	default value	0.000s
	setting range	0.00~10.000	

Proportional Gain Kp1:

It determines the regulation strength of the entire PID regulator. A larger Kp1 indicates stronger regulation strength. When the PID feedback value and setpoint deviation is 100.0%, a Kp1 of 100.0 means that the PID regulator's adjustment amplitude for the output frequency command is the Maximum Frequency.

Integral Time Ti1:

It determines the regulation strength of the PID regulator's integral action. A shorter integral time indicates stronger regulation strength. The integral time refers to the time it takes for the integral regulator to

continuously adjust when the PID feedback value and setpoint deviation is 100.0%, reaching an adjustment amount equal to the Maximum Frequency.

Differential Time Td1:

It determines the regulation strength of the PID regulator's differential action with respect to the deviation change rate. A longer differential time indicates stronger regulation strength. The differential time refers to the time it takes for the differential regulator to adjust by an amount equal to the Maximum Frequency when the feedback value changes by 100.0% within this time.

PA-08	PID Reverse Cutoff Frequency	default value	0.00Hz
	setting range	0.00~Maximum Frequency	

In some cases, the PID can only control the setpoint and feedback to the same state when the PID output frequency is negative (i.e., the drive is reversing). However, an excessively high reverse frequency is not allowed in some applications. PA-08 is used to determine the upper limit of the reverse frequency.

PA-09	PID Deviation Limit	default value	0.01%
	setting range	0.0%~100.0%	

When the deviation between the PID setpoint and feedback is less than PA09, the PID stops regulating. This way, the output frequency remains stable when the deviation between the setpoint and feedback is small, which is effective for some closed-loop control scenarios.

PA-10	PID Derivative Limit	default value	0.10%
	setting range	0. 00%~100.00%	

In the PID regulator, the differential action is relatively sensitive and can easily cause system oscillations. Therefore, the PID differential output is generally limited to a small range. PA-10 is used to set the range of the PID differential output.

PA-11	PID Setpoint Change Time	default value	0.00s
	setting range	0.00s~650.00s	

The PID setpoint change time refers to the time required for the PID setpoint to change from 0.0% to 100.0%.

When the PID setpoint changes, the PID setpoint value changes linearly according to the setpoint change time, reducing the adverse impact of sudden setpoint changes on the system.

PA-12	PID Feedback Filter Time	default value	0.00s
	setting range	0.00s~60.00s	
PA-13	PID Output Filter Time	default value	0.00s

	setting range	0.00s~60.00s

PA-12 is used to filter the PID feedback value. This filtering helps to reduce the impact of interference on the feedback value but may decrease the response performance of the process closed-loop system.

PA-13 is used to filter the PID output frequency. This filtering weakens sudden changes in the drive's output frequency but may also decrease the response performance of the process closed-loop system.

PA-15	Proportional Gain Kp2		default value	20.0
	setting range		0.0~100.0	
PA-16	Integral Time Ti2		default value	2 .00s
	setting range		0.01s~10.00s	
PA-17	Derivative Time Td2		default value	0.000s
	setting range		0.00~10.000	
PA-18	PID Parameter Switching Condition		default value	0
	setting range	0	No Switching	
		1	Switch via DI Terminal	
		2	Auto Switch Based on Deviation	
PA-19	PID Parameter Switching Deviation 1		default value	20.0%
	setting range		0.0%~PA-20	
PA-20	PID Parameter Switching Deviation 2		default value	80.0%
	setting range		PA-19~100.0%	

In some application scenarios, a single set of PID parameters cannot meet the requirements of the entire operating process. Different PID parameters are needed under different conditions. This group of Function codes is used for switching between two sets of PID parameters. The setting methods of the regulator parameters PA-15~PA-17 are similar to those of parameters PA-05~PA-07.

The two sets of PID parameters can be switched through the multifunctional digital DI Terminal or automatically according to the PID deviation.

When selecting multifunctional DI Terminal switching, the multifunctional Terminal Function Selection should be set to 43 (PID parameter switching Terminal). When this Terminal is inactive, parameter group 1 (PA-05~PA-07) is selected. When the Terminal is active, parameter group 2 (PA-15~PA-17) is selected.

When selecting automatic switching, if the absolute value of the deviation between the setpoint and feedback is less than the PID parameter switching deviation 1 PA-19, PID parameter group 1 is selected. If the absolute value of the deviation between the setpoint and feedback is greater than the PID parameter switching deviation 2 PA-20, PID parameter group 2 is selected. If the absolute value of the deviation between the setpoint and feedback is between switching deviation 1 and switching deviation 2, the PID parameters are the linearly interpolated values of the two parameter groups, as shown in the following figure.

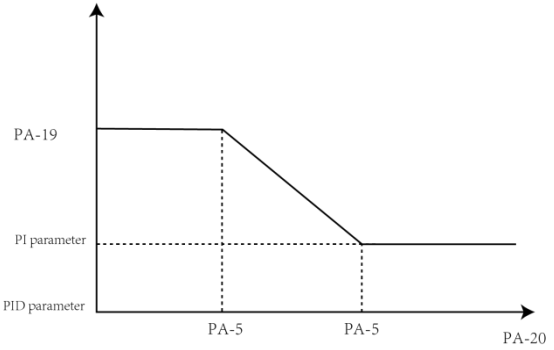

PID Parameter Switching

PA-21	PID Initial Value	default value	0.0%
	setting range	0.0%~100.0%	
PA-22	PID Initial Value Hold Time	default value	0.00s
	setting range	0.00s~650.00s	

When the drive starts, the PID output is fixed at the PID initial value PA-21. After the PID initial value holding time PA-22, the PID begins closed-loop regulation operation. The following figure shows the function of the PID initial value.

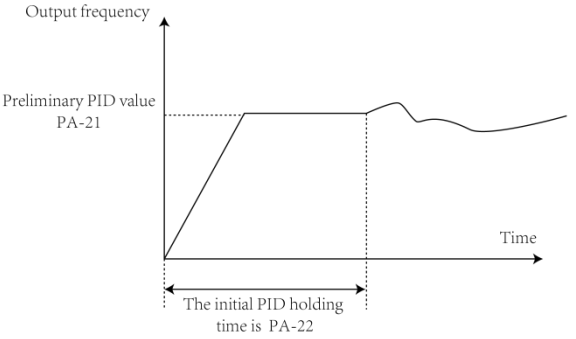

PID Initial Value diagram

PA-23	Maximum Forward Deviation Between Two Outputs	default value	1.00%
	setting range	0.00%~100.00%	
PA-24	Maximum Reverse Deviation Between Two Outputs	default value	1.00%
	setting range	0.00%~100.00%	

This function is used to limit the difference between two beats (2ms/beat) of the PID output to suppress overly rapid PID output changes and make the drive's operation more stable.

PA-23 and PA-24 correspond to the maximum absolute values of the output deviation in the Forward and Reverse directions, respectively.

PA-25	PID Integral Property	default value	00
	setting range	Bit 0: Integral Separation 0: Invalid 1: Valid Bit 10: Stop Integration After Reaching Limit 0: Continue Integration 1: Stop Integration	

Integral Separation:

If integral separation is enabled, when the multifunctional digital S integral pause (Function 22) is active, the PID's integral action stops, and only the proportional and differential actions are effective.

When integral separation is disabled, the integral separation is ineffective regardless of whether the multifunctional digital S is active.

Output to Limit: Whether to Stop Integrating:

After the PID operation output reaches the maximum or minimum value, you can choose whether to stop the integral action. If stopping the integral action is selected, the PID integral calculation stops, which may help to reduce the PID's overshoot.

PA-26	PID Feedback Loss Detection Value	default value	0.0%
	setting range	0.0%：No Feedback Loss	
PA-27	PID Feedback Loss Detection Time	default value	1.0s
	setting range	0.0s~20.0s	

This Function code is used to judge whether the PID feedback is lost.

When the PID feedback value is less than the feedback loss detection value PA-26 and the duration exceeds the PID feedback loss detection time PA-27, the drive issues a fault alarm "Err31" and handles it according to the selected fault processing method.

PA-28	PID Stop Calculation	default value	0

	setting range	0	No Calculation at Stop
		1	Calculation at Stop

This parameter is used to select whether the PID continues to operate in the stop state. In general application scenarios, the PID should stop operating in the stop state. However, in sleep and wake-up functions, PA-28 must be set to 1.

PA-29	PID Sampling Time	default value	1
	setting range	0~10	
PA-30	PID Feedforward Compensation Gain	default value	0
	setting range	0~5000	
PA-31	PID Feedforward Compensation Lower Limit Frequency	default value	5.00HZ
	setting range	0.00Hz~P0-10(Maximum Frequency)	

These parameters affect the PID's response speed.

PA-32	PID Power-On Delay Disconnection Detection Time	default value	8.0s
	setting range	0.0s~200.0s	
PA-33	Stop Brake Action Frequency	default value	1.50Hz
	setting range	0~5000	
PA-34	Brake Action Delay Time	default value	5.0s
	setting range	0.0s~200.0s	

These parameters are used on a wire drawing machine, with the output signal of Relay 1 set to 44 for coordination with the main machine.

Pb Group Swing Frequency, Fixed Length, and Counting

The swing frequency function is applicable to industries such as textiles and chemical fibers, as well as scenarios requiring traversing and winding functions.

The swing frequency function means that the driver's output frequency oscillates around a set frequency. The operating frequency trajectory over time is as shown in the figure below. The swing amplitude is set by Pb-00 and Pb-01. When Pb-01 is set to 0, the swing amplitude is 0, and the swing frequency function is disabled.

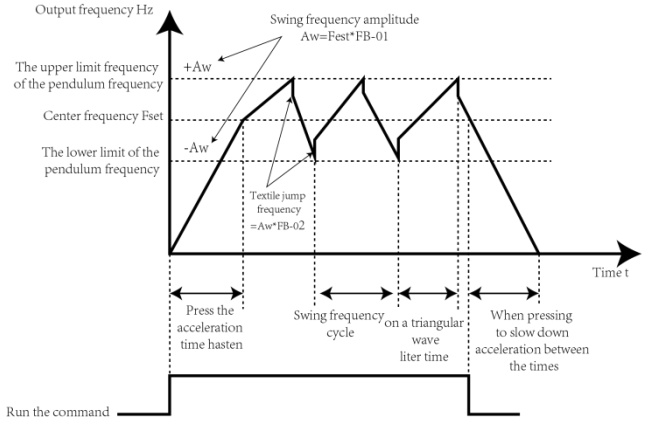

Swing Frequency working diagram

Pb-00	Swing Frequency Setting Mode		default value	0
	setting range	0	Relative to Center Frequency	
		1	Relative to Maximum Frequency	

This parameter is used to determine the reference value for the swing amplitude.

0: Relative to the center frequency (P0-07 frequency source), which is a variable swing amplitude system. The swing amplitude changes with the center frequency (set frequency).

1: Relative to the Maximum Frequency (P0-10), which is a fixed swing amplitude system, and the swing amplitude remains constant.

Pb-01	Swing Frequency Amplitude	default value	0.0%
	setting range	0.0%~100.0%	
Pb-02	Sudden Jump Frequency Amplitude	default value	0.0%
	setting range	0.0%~50.0%	

This parameter is used to determine the swing amplitude value and the jump frequency value.

When the swing amplitude is set relative to the center frequency (Pb-00 = 0), the swing amplitude AW = frequency source P0-07 × swing amplitude Pb-01.

When the swing amplitude is set relative to the Maximum Frequency (Pb-00 = 1), the swing amplitude AW = Maximum Frequency P0-10 × swing amplitude Pb-01.

The jump frequency amplitude is the percentage of the jump frequency relative to the swing amplitude during swing frequency operation, i.e., jump frequency = swing amplitude AW × jump frequency amplitude Pb-02. If the swing amplitude is set relative to the center frequency (Pb-00 = 0),

the jump frequency is a variable value. If the swing amplitude is set relative to the Maximum Frequency (Pb-00 = 1), The swing frequency operating frequency is constrained by the upper and lower frequency limits.

Pb-03	Swing Frequency Period	default value	10.0s
	setting range	0.0s~3000.0s	
Pb-04	Swing Frequency Triangular Wave Rise Time	default value	50.0%
	setting range	0.0%~100.0%	

Swing frequency period: The time value for one complete swing frequency cycle.

The triangular wave rising time coefficient Pb-04 is the percentage of the triangular wave rising time relative to the swing frequency period Pb-03. Triangular wave rising time = swing frequency period Pb-03 × triangular wave rising time coefficient Pb-04, in seconds. Triangular wave falling time = swing frequency period Pb-03 × (1 - triangular wave rising time coefficient Pb-04), in seconds.

Pb-05	Set Length	default value	1000m
	setting range	0 m~65535m	
Pb-06	Actual Length	default value	0m
	setting range	0 m~65535m	
Pb-07	Pulses Per Meter	default value	100 .0
	setting range	0 . 1~6553 .5	

The above Function code is used for fixed-length control.

Length information is collected through a multifunctional digital input Terminal. The actual length Pb-06 is calculated by dividing the number of pulses sampled by the Terminal by the number of pulses per meter Pb-07. When the actual length exceeds the set length Pb-05, the multifunctional digital S outputs an "Length Reached" ON signal.

During fixed-length control, a length reset operation can be performed through a multifunctional DI digital input Terminal (the DI digital input Terminal function is set to 28). For details, please refer to P4-00~P4-09.

In the application, the corresponding input Terminal function should be set to "Length Count Input" (function 27). When the pulse frequency is high, the DI5 port must be used.

Pb-08	Set Count Value	default value	1000
	setting range	1~65535	
Pb-09	Designated Count Value	default value	1000

	setting range	1~65535

The count value is collected through a multifunctional digital input Terminal. In the application, the corresponding input Terminal function should be set to "Counter Input" (function 25). When the pulse frequency is high, the DI5 port must be used.

When the count value reaches the set count value Pb-08, the multifunctional digital DO outputs a "Set Count Value Reached" ON signal, and then the counter stops counting. When the count value reaches the specified count value Pb-09, the multifunctional digital DO outputs a "Specified Count Value Reached" ON signal. At this time, the counter continues counting until it reaches the "Set Count Value" and then stops.

The specified count value Pb-09 should not be greater than the set count value Pb-08. Figure 6-29 is a schematic diagram of the set count value reached and specified count value reached functions.

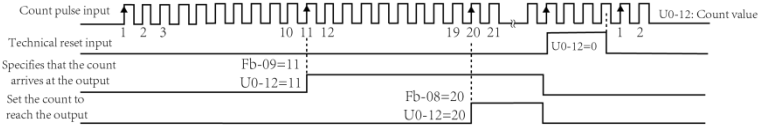

Set Count Value Given and Specify Count Value Given Schematic Diagram

PC Group: Multi-segment Instructions and Simple PLC Function

Multi-segment instructions have richer functions than ordinary multi-segment speeds. In addition to realizing multi-segment speed functions, they can also serve as a voltage source for V/F separation and a setpoint source for process PID. Therefore, the dimension of multi-segment instructions is a relative value. The simple PLC can only perform combined operation of multi-segment instructions.

PC-00	Multi-Step Command 0	default value	0.0%
	setting range	-100.0%~100.0%	
PC-01	Multi-Step Command 1	default value	0.0%
	setting range	-100.0%~100.0%	
PC-02	Multi-Step Command 2	default value	0.0%
	setting range	-100.0%~100.0%	
PC-03	Multi-Step Command 3	default value	0.0%
	setting range	-100.0%~100.0%	
PC-04	Multi-Step Command 4	default value	0.0%
	setting range	-100.0%~100.0%	
PC-05	Multi-Step Command 5	default value	0.0%
	setting range	-100.0%~100.0%	

PC-06	Multi-Step Command 6	default value	0.0%
	setting range	-100.0%~100.0%	
PC-07	Multi-Step Command 7	default value	0.0%
	setting range	-100.0%~100.0%	
PC-08	Multi-Step Command 8	default value	0.0%
	setting range	-100.0%~100.0%	
PC-09	Multi-Step Command 9	default value	0.0%
	setting range	-100.0%~100.0%	
PC-10	Multi-Step Command 10	default value	0.0Hz
	setting range	-100.0%~100.0%	
PC-11	Multi-Step Command 11	default value	0.0%
	setting range	-100.0%~100.0%	
PC-12	Multi-Step Command 12	default value	0.0%
	setting range	-100.0%~100.0%	
PC-13	Multi-Step Command 13	default value	0.0%
	setting range	-100.0%~100.0%	
PC-14	Multi-Step Command 14	default value	0.0%
	setting range	-100.0%~100.0%	
PC-15	Multi-Step Command 15	default value	0.0%
	setting range	-100.0%~100.0%	

Multi-segment instructions can be used in three scenarios: as a frequency source, as a voltage source for V/F separation, and as a setpoint source for process PID.

In these three application scenarios, the dimension of multi-segment instructions is a relative value, ranging from -100.0% to 100.0%. When used as a frequency source, it is a percentage relative to the Maximum Frequency; when used as a V/F separation voltage source, it is a percentage relative to the motor's rated voltage; and since PID setpoints are already relative values, no dimension conversion is required when multi-segment instructions are used as a PID setpoint source.

Multi-segment instructions need to be switched and selected based on the different states of multifunctional DI digital input Terminals. For details, please refer to the relevant descriptions in Group P4.

PC-16	Simple PLC Run Mode		default value	0
	setting range	0	Stop After Single Run	
		1	Maintain Final Value After Single Run	

		2	Continuous Cycle

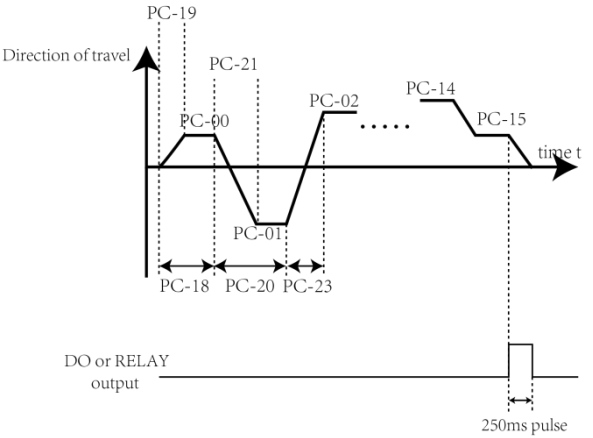

When used as a frequency source, the PLC has three operating modes. It does not have these three modes when used as a V/F separation voltage source. The modes are as follows:

0: Single-cycle operation with stop. After completing a single cycle, the driver automatically stops and requires a new run command to start again.

1: Single-cycle operation with terminal value retention. After completing a single cycle, the driver automatically retains the operating frequency and direction of the last segment.

2: Continuous cycling. After completing a cycle, the driver automatically starts the next cycle and stops only when a stop command is received.

PC-17	Simple PLC Power-Off Memory Selection		default value	00
	setting range	Bit 0	Power-Off Memory Selection	
		0	No Memory at Power-Off	
		1	Memory at Power-Off	
		Bit 10	Stop Memory Selection	
		0	No Memory at Stop	
		1	Memory at Stop	

PLC power-off memory refers to memorizing the PLC's operating stage and operating frequency before power-off. The next time it is powered on, it continues running from the memorized stage. If not selected for memory, the PLC process starts from the beginning each time it is powered on.

PLC stop memory refers to recording the previous PLC's operating stage and operating frequency at the time of stop. The next time it runs, it continues from the memorized stage. If not selected for memory, the PLC process starts from the beginning each time it is started.

PC-18	Simple PLC Stage 0 Run Time	default value	0.0s(h)
	setting range	0.0s(h)~6553.5s(h)	
PC-19	Simple PLC Stage 0 Accel/Decel Time Selection	default value	0
	setting range	0~3	
PC-20	Simple PLC Stage 1 Run Time	default value	0.0s(h)
	setting range	0.0s(h)~6553.5s(h)	
PC-21	Simple PLC Stage 1 Accel/Decel Time Selection	default value	0
	setting range	0~3	
PC-22	Simple PLC Stage 2 Run Time	default value	0.0s(h)
	setting range	0.0s(h)~6553.5s(h)	
PC-23	Simple PLC Stage 2 Accel/Decel Time Selection	default value	0
	setting range	0~3	
PC-24	Simple PLC Stage 3 Run Time	default value	0.0s(h)
	setting range	0.0s(h)~6553.5s(h)	
PC-25	Simple PLC Stage 3 Accel/Decel Time Selection	default value	0
	setting range	0~3	
PC-26	Simple PLC Stage 4 Run Time	default value	0.0s(h)
	setting range	0.0s(h)~6553.5s(h)	
PC-27	Simple PLC Stage 4 Accel/Decel Time Selection	default value	0
	setting range	0~3	
PC-28	Simple PLC Stage 5 Run Time	default value	0.0s(h)
	setting range	0.0s(h)~6553.5s(h)	
PC-29	Simple PLC Stage 5 Accel/Decel Time Selection	default value	0
	setting range	0~3	
PC-30	Simple PLC Stage 6 Run Time	default value	0.0s(h)
	setting range	0.0s(h)~6553.5s(h)	
PC-31	Simple PLC Stage 6 Accel/Decel Time Selection	default value	0
	setting range	0~3	

PC-32	Simple PLC Stage7 Run Time	default value	0.0s(h)
	setting range	0.0s(h)~6553.5s(h)	
PC-33	Simple PLC Stage 7 Accel/Decel Time Selection	default value	0
	setting range	0~3	
PC-34	Simple PLC Stage 8 Run Time	default value	0.0s(h)
	setting range	0.0s(h)~6553.5s(h)	
PC-35	Simple PLC Stage 8 Run Time	default value	0
	setting range	0~3	
PC-36	Simple PLC Stage 9 Run Time	default value	0.0s(h)
	setting range	0.0s(h)~6553.5s(h)	
PC-37	Simple PLC Stage 9 Accel/Decel Time Selection	default value	0
	setting range	0~3	
PC-38	Simple PLC Stage10 Run Time	default value	0.0s(h)
	setting range	0.0s(h)~6553.5s(h)	
PC-39	Simple PLC Stage 10 Accel/Decel Time Selection	default value	0
	setting range	0~3	
PC-40	Simple PLC Stage 11 Run Time	default value	0.0s(h)
	setting range	0.0s(h)~6553.5s(h)	
PC-41	Simple PLC Stage 11 Accel/Decel Time Selection	default value	0
	setting range	0~3	
PC-42	Simple PLC Stage 12 Run Time	default value	0.0s(h)
	setting range	0.0s(h)~6553.5s(h)	
PC-43	Simple PLC Stage 12 Accel/Decel Time Selection	default value	0
	setting range	0~3	
PC-44	Simple PLC Stage 13 Run Time	default value	0.0s(h)
	setting range	0.0s(h)~6553.5s(h)	
PC-45	Simple PLC Stage 13 Accel/Decel Time Selection	default value	
	setting range	0 ~3	
PC-46	Simple PLC Stage 14 Run Time	default value	
	setting range	0.0s(h)~6553.5s(h)	
PC-47	Simple PLC Stage 14 Accel/Decel Time Selection	default value	

	setting range	0~3
PC-48	Simple PLC Stage 15 Run Time	default value
	setting range	0.0s(h)~6553.5s(h)
PC-49	Simple PLC Stage 15 Accel/Decel Time Selection	default value
	setting range	0~3
PC-50	Simple PLC Run Time Unit	default value
	setting range	0:S（second）

This parameter determines the given channel for multi-segment instruction 0.

PC-51	setting range	1	h(hour)	
	Multi-Step Command 0 Setting Mode		default value	0
	setting range	0	Function codePC-00Setting	
		1	AI1	
		2	AI2	
		3	AI3	
		4	PULSE	
		5	PID	
		6	Preset Frequency (P0-08), adjustable via UP/DOWN	

In addition to being able to choose PC-00, multi-segment instruction 0 has multiple other options to facilitate switching between multi-segment instructions and other given methods. When multi-segment instructions are used as a frequency source or when the simple PLC is used as a frequency source, it is easy to achieve switching between the two frequency sources.

PC-52	Multi-Step Speed Priority Selection	default value	0
	setting range	0：Not Priority ， 1: Priority	

Multi-segment speed priority means that when the multi-segment speed Terminals are not all 0, the multi-segment speed command value is executed preferentially.

PC-53	Multi-Step Speed Frequency Unit Selection	default value	1
	setting range	0：% 1：Hz	

This is used to select the unit for multi-segment speeds AC-00~AC-15 to meet the needs of different scenarios for multi-segment speed frequency units.

PD Group Communication Parameters

Please refer to "Appendix I: Modbus Communication Protocol".

PE Group User-Defined Function Codes

PE-00	User Function code0	default value	P0.00
	setting range	P0.00~PP.xx,H0.00~Ax.xx,U0.xx	
PE-01	User Function code1	default value	P0.02
	setting range	Same as PE-00	
PE-02	User Function code2	default value	P0.03
	setting range	Same as PE-00	
PE-03	User Function code3	default value	P0.07
	setting range	Same as PE-00	
PE-04	User Function code4	default value	P0.08
	setting range	Same as PE-00	
PE-05	User Function code5	default value	P0.17
	setting range	Same as PE-00	
PE-06	User Function code6	default value	P0.18
	setting range	Same as PE-00	
PE-07	userFunction code7	default value	P3.00
	setting range	Same as PE-00	
PE-08	User Function code8	default value	P3.01
	setting range	Same as PE-00	
PE-09	User Function code9	default value	P4.00
	setting range	Same as PE-00	
PE-10	User Function code10	default value	P4.01
	setting range	Same as PE-00	
PE-11	User Function code11	default value	P4.02
	setting range	Same as PE-00	
PE-12	User Function code12	default value	P5.04
	setting range	Same as PE-00	
PE-13	User Function code13	default value	P5.07
	setting range	Same as PE-00	
PE-14	User Function code14	default value	P6.00
	setting range	Same as PE-00	

PE-15	User Function code15	default value	P6.10
	setting range	Same as PE-00	
PE-16	User Function code16	default value	P0.00
	setting range	Same as PE-00	
PE-17	User Function code17	default value	P0 .00
	setting range	Same as PE-00	
PE-18	User Function code18	default value	P0.00
	setting range	Same as PE-00	
PE-19	User Function code19	default value	P0.00
	setting range	Same as PE-00	
PE-20	User Function code20	default value	P0.00
	setting range	Same as PE-00	
PE-21	User Function code21	default value	P0.00
	setting range	Same as PE-00	
PE-22	User Function code22	default value	P0.00
	setting range	Same as PE-00	
PE-23	User Function code23	default value	P0.00
	setting range	Same as PE-00	
PE-24	User Function code24	default value	P0.00
	setting range	Same as PE-00	
PE-25	User Function code25	default value	P0.00
	setting range	Same as PE-00	
PE-26	User Function code26	default value	P0.00
	setting range	Same as PE-00	
PE-27	User Function code27	default value	P0.00
	setting range	Same as PE-00	
PE-28	User Function code28	default value	P0.00
	setting range	Same as PE-00	
PE-29	User Function code29	default value	P0.00
	setting range	Same as PE-00	

This group of Function codes is for user-customized parameter groups.

Users can select the required parameters from all Function codes and summarize them into the PE group as user-customized parameters for convenient viewing and modification. The PE group provides up to 30 user-customized parameters. If the displayed value of a PE group parameter is P0.00, it means that the corresponding user Function code is empty. When entering the user-customized parameter mode, the displayed Function codes are defined by PE-00~PE-31, and the order is consistent with the PE group Function codes. If it is P0-00, it is skipped.

PP Group Function Code Management

PP-00	userPassword	default value	0
	setting range	0~65535	

Setting PP-00 to any non-zero number enables the password protection function. The next time the menu is entered, the correct password must be entered; otherwise, the functional parameters cannot be viewed or modified. Please remember the set user password.

Setting PP-00 to 00000 clears the set user password and disables the password protection function.

PP-01	Parameter Initialization	default value	0
	setting range	0: No Operation 01: Restore Factory Parameters, Excluding Motor Parameters 02: Clear Record Information 04: Restore User Backup Parameters 501: Backup Current User Parameters	

Restore factory default settings, excluding motor parameters.

Setting PP-01 to 1 restores most of the driver's functional parameters to the factory default settings. However, motor parameters, frequency command decimal places (P0-22), fault record information, cumulative operating time (P7-09), cumulative power-on time (P7-13), and cumulative power consumption (P7-14) are not restored.

Clear record information.

Clear the driver's fault record information, cumulative operating time (P7-09), cumulative power -on time (P7-13), and cumulative power consumption (P7-14).

Back up the current user parameters.

Back up the parameters currently set by the user. Save the setting values of all current functional parameters to facilitate the user in restoring them if the parameters are adjusted incorrectly.

Restore the user's backed-up parameters.

Restore the user's previously backed-up parameters, i.e., restore the parameters backed up by setting PP-01 to 501.

PP-02	Function Parameter Group Display Selection		default value	11
	setting range	Bit 0: U Group Display Selection 0: Do Not Display 1: Display Bit 10: A Group Display Selection 0: Do Not Display 1: Display		
PP-03	Custom Parameter Group Display Selection		default value	00
	setting range	Bit 0: User-Defined Parameter Group Display		

The establishment of parameter display modes is mainly to facilitate users in viewing functional parameters in different arrangement forms according to actual needs. Three parameter display modes are provided.

Name	description
Function parameter method	Display Drive function parameter in sequence, there are P0~PP、H0~AP、U0~UP function parameter group
User-Defined parameter method	User-Defined displayed function parameter(32 at most), change through PE group
User change parameter method	Function parameter different from the default parameters

When there is a display selection for the personalized parameter mode (PP-03), different parameter display modes can be switched by pressing the JOG/QUICK key. The default value is to display parameters in the functional parameter mode only. The display codes for each parameter display mode are as follows:：

Parameter display method	Display
Function parameter method	-bASE
User-Define parameter method	-USER
User change parameter method	--C--

The driver provides two groups of personalized parameter display modes: user-customized parameter mode and user-changed parameter mode. The user-customized parameter group consists of parameters set by the user into the PE group, with a maximum of 32 parameters. These parameters are summarized together to facilitate user debugging.

In the user-customized parameter mode, a symbol "u" is added before the user-customized Function code by default. For example, P1-00 is displayed as uP1-00 in the user-customized parameter mode. The user-changed parameter mode is for parameters that the user has

changed and are different from the factory default values. The user-changed parameter group is beneficial for users to view a summary of the changed parameters, facilitating on-site problem-solving.

In the user-changed parameter mode, a symbol "c" is added before the user-changed Function code by default. For example, P1-00 is displayed as cP1-00.

PP-04	Function Code Modification Attribute		default value	0
	setting range	0	Modifiable	
		1	Non-modifiable	

This Function code is used to set whether the user can modify the Function code parameters to prevent the functional parameters from being accidentally modified.

If this Function code is set to 0, all Function codes can be modified. If it is set to 1, all Function codes can only be viewed and cannot be modified.

PP-05	Model Setting	1: G-type Machine, 2: P-type Machine	1	★

For G/P combined models, users can set the driver to operate in G-type or P-type mode through this parameter. After changing this parameter, the displayed value of parameter P0-00 will be modified accordingly.

For the same driver, the rated power when operating in P-type mode is one level higher than when operating in G-type mode. Therefore, after changing this parameter, parameters related to the driver power and motor power will be automatically modified.

H0 Group: Torque Control and Limit Parameters

H0-00	Speed/Torque Control Mode Selection		default value	0
	setting range	0	Speed Control	
		1	Torque Control	

This is used to select the driver's control mode: speed control or torque control.

The multifunctional DI digital input Terminal has two functions related to torque control: torque control disable (function 29) and speed control/torque control switching (function 46). These Terminals need to be used in conjunction with H0-00 to achieve switching between speed and torque control.

When the speed control/torque control switching Terminal is invalid, the control mode is determined by H0-00. If the speed control/torque control switching is valid, the control mode is the inverse of the value of H0-00.

In any case, when the torque control disable Terminal is valid, the driver is fixed in speed control mode.

H0-01	Torque Control Mode Torque Setting Source Selection		default value	0
	setting range	0	Digital Setting (H0-03)	
		1	AI1	
		2	AI2	
		3	AI3	
		4	PULSE	
		5	Communication Command	
		6	MIN(AI1, AI2)	
		7	MAX(AI1, AI2)	
H0-03	Torque Control Mode Torque Digital Setting		default value	0
	setting range		-200.0%~200.0%	

The torque setting adopts a relative value, with 100.0% corresponding to the driver's rated torque. The setting range is -200.0% to 200.0%, indicating that the maximum torque of the inverter is 2 times the driver's rated torque.

When the torque setting adopts methods 1~7, 100% of communication, analog input, and pulse input corresponds to H0-03.

H0-05	Torque Control Forward Maximum Frequency	default value	50.00Hz
	setting range	0.00Hz~Maximum Frequency(P0-10)	
H0-06	Torque Control Forward Maximum Frequency	default value	50.00Hz
	setting range	0.00Hz~Maximum Frequency(P0-10)	

This is used to set the forward or reverse maximum operating frequency of the driver in torque control mode.

When the driver is in torque control mode, if the load torque is less than the motor's output torque, the motor speed will continue to increase. To prevent accidents such as runaway in the mechanical system, the maximum speed of the motor during torque control must be limited.

H0-07	Torque Control Acceleration Time	default value	0.00s
	setting range	0.00s~65000s	
H0-08	Torque Control Deceleration Time	default value	0.00s
	setting range	0.00s~65000s	

In torque control mode, the difference between the motor's output torque and the load torque determines the speed change rate of the motor and load. Therefore, the motor speed may change rapidly, causing problems such as noise or excessive mechanical stress. By setting the torque control acceleration and deceleration time, the motor speed can change smoothly.

However, for scenarios requiring rapid torque response, the torque control acceleration and deceleration time should be set to 0.00s.

For example: When two motors are hard-connected to drive the same load, to ensure uniform load distribution, one driver is set as the master and uses speed control mode, while the other driver is set as the slave and uses torque control mode. The actual output torque of the master is used as the torque command for the slave. In this case, the torque of the slave needs to follow the master quickly, so the torque control acceleration and deceleration time of the slave is set to 0.00s.。

H1 Group Virtual IO

H1-00	Virtual VDI1 Terminal Function Selection	default value	0
	setting range	0~59	
H1-01	Virtual VDI2 Terminal Function Selection	default value	0
	setting range	0~59	
H1-02	Virtual VDI3 Terminal Function Selection	default value	0
	setting range	0~59	
H1-03	Virtual VDI4 Terminal Function Selection	default value	0
	setting range	0~59	
H1-04	Virtual VDI5 Terminal Function Selection	default value	0
	setting range	0~59	

Virtual VDI1~VDI5 are functionally identical to the DI digital input Terminals on the control board and can be used as multifunctional digital inputs. For detailed settings, please refer to the introduction in P4-00~P4-09.

H1-05	Virtual VDI Terminal Status Setting Mode		default value 00000
	setting range	Bit 0	Virtual VDI1
		0	VS validity determined by virtual VDOx state
		1	VS validity set by function code H1-06 Units place: Virtual VDI1
		Bit 10	Virtual VDI2(0~1， same as above)

		Bit 100	Virtual VDI3((0~1， same as above)
		Bit 1000	Virtual VDI4(0~1， same as above)
		Bit 10000	Virtual VDI5((0~1， same as above)
H1-06	Virtual VS TerminalStatus Setting		default value 00000
	setting range	Bit 0	Virtual VDI1
		0	Non-valid
		1	valid
		Bit 10	Virtual VDI((0~1， same as above)
		Bit 100	Virtual VDI3(0~1， same as above)
		Bit 1000	Virtual VDI4(0~1， same as above)
		Bit 10000	Virtual VDI5(0~1， same as above)

Unlike ordinary digital input Terminals, the state of Virtual VS can be set in two ways, which are selected through H1-05. When the VS state is determined by the state of the corresponding Virtual VDO, whether VS is in an effective state depends on whether the VDO output is valid or invalid, and VSx is uniquely bound to VDOx (x is 1~5).

When the VS state is set by the Function code, the state of the Virtual input Terminal is determined by the binary bits of Function code H1-06. Below are examples to illustrate the use of Virtual VDI.

Example 1: When the VDO state determines the VDI state, to achieve the following function: "When the AI1 input exceeds the upper and lower limits, the driver issues a fault alarm and stops," the following setting method can be adopted:

Set the function of VDI1 to "User-defined Fault 1" (H1-00 = 44); set the effective state mode of the VDI1 Terminal to be determined by VDO1 (H1-05 = xxx0); set the output function of VDO1 to "AI1 input exceeds upper and lower limits" (H1-11 = 31). Then, when the AI1 input exceeds the upper and lower limits, the VDO1 output is in the ON state. At this time, the VDI1 input Terminal state is valid, and the driver receives User-defined Fault 1 through VDI1. The driver will issue a fault alarm Err27 and stop.

Example 2: When the VS state is set by Function code H1-06, to achieve the following function: "After the driver is powered on, it automatically enters the running state," the following setting method can be adopted:

Set the function of VDI1 to "Forward Run" (H1-00 = 1); set the effective state mode of the VDI1 Terminal to be set by the Function code (H1-05 = xxx1); set the state of the VDI1 Terminal to be valid (H1-06 = xxx1); set the command source to "Terminal Control" (P0-02 = 1); set the start protection selection to "No Protection" (P8-18 = 0). Then, after the driver completes initialization upon power-on, it detects that VDI1 is valid, and this Terminal corresponds to

forward run. It is equivalent to the driver receiving a Terminal forward run command, and the driver starts running forward immediately.

H1-07	AI2 Terminal Function Selection (as Digital Input)		default value	0
	setting range		0~59	
H1-08	AI2 Terminal Function Selection (as Digital Input)		default value	0
	setting range		0~59	
H1-09	AI3 Terminal Function Selection (as Digital Input)		default value	0
	setting range		0~59	
H1-10	Analog Signal Terminal Effective Mode Selection (as Digital Input)		default value	000
	setting range	Bit0	AI1	
		0	High-level effective	
		1	Low-level effective	
		Bit 100	AI2(0~1， same as bito)	
		Bit 1000	AI3(0~1， same as bito)	

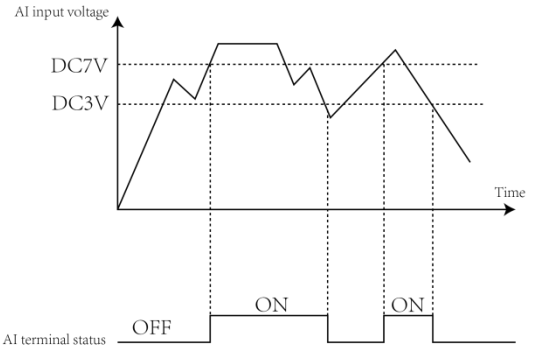

Analog Input Terminal Effective State Judgment

This group of Function codes is used to treat the analog input as a DI input Terminal. When the analog input is used as a DI input Terminal, when the analog input voltage is greater than 7V, the state of the analog input Terminal is high level. When the analog input voltage is lower than 3V, the state of the analog input Terminal is low level. The hysteresis range of 3V~7V is determined by H1-10, which is used to determine whether the high level or low level of the analog input is the effective state when the analog input is used as a DI input Terminal. As for the function setting of the analog input when it is used as a DI input Terminal, it is the

same as the setting of an ordinary DI input Terminal. Please refer to the relevant DI input Terminal setting descriptions in Group P4.

H1-11	Virtual VDO1 Output Function Selection		default value	0
	setting range		0: Internally short-circuited with physical Sx 1~40: Refer to P5 Group Physical DO Output SelectionTerminal	
H1-12	Virtual VDO2 Output Function Selection		default value	0
	setting range		0: Internally short-circuited with physical Sx 1~40: Refer to P5 Group Physical DO Output Selection	
H1-13	Virtual VDO3 Output Function Selection		default value	0
	setting range		0: Internally short-circuited with physical Sx 1~40: Refer to P5 Group Physical DO Output Selection	
H1-14	Virtual VDO4 Output Function Selection		default value	0
	setting range		0: Internally short-circuited with physical Sx 1~40: Refer to P5 Group Physical DO Output Selection	
H1-15	Virtual VDO5 Output Function Selection		default value	0
	setting range		0: Internally short-circuited with physical Sx 1~40: Refer to P5 Group Physical DO Output Selection	
H1-16	VDO1Output Delay Time		default value	0.0s
	setting range		0.0s~3600.0s	
H1-17	VDO2Output Delay Time		default value	0.0s
	setting range		0.0s~3600.0s	
H1-18	VDO3Output Delay Time		default value	0.0s
	setting range		0.0s~3600.0s	
H1-19	VDO4Output Delay Time		default value	0.0s
	setting range		0.0s~3600.0s	
H1-20	VDO5Output Delay Time		default value	0.0s
	setting range		0.0s~3600.0s	
H1-21	VDO Output Terminal Active State Selection		default value	00000
	setting range	Bit 0	VDO1	
		0	Positive logic	
		1	Negative logic	
		Bit 10	VDO2(0~1，same as bito)	

		Bit 100	VDO3(0~1，same as bito)
		Bit 1000	VDO4(0~1，same as bito)
		Bit 10000	VDO5(0~1，same as bito)

The Virtual digital output function is similar to the DO output function on the control board and can be used in conjunction with Virtual digital input VSx to achieve some simple logic controls.

When the output function of Virtual VDOx is set to 0, the output state of VDO1~VDO5 is determined by the input state of DI1~DI5 on the control board. At this time, VDOx and Sx are one-to-one corresponding.

When the output function of Virtual VDOx is set to a non-zero value, the function setting and usage method of VDOx are the same as those of the DO output-related parameters in Group P5. Please refer to the relevant parameter descriptions in Group P5.

Similarly, the output effective state of VDOx can be selected as positive logic or negative logic, which is set through H1-21. The application examples of VSx include the use of VDOx. Please refer to them.

H2 Group: Second Motor Control

The H2 group contains parameters for the second motor. This series of drivers can switch operation between two motors. The two motors can have their nameplate parameters set separately, can be tuned separately, can select V/F control or vector control separately, can set encoder-related parameters separately, and can set parameters related to V/F control or vector control performance separately.

All parameters in the H2 group have the same content definitions and usage methods as the relevant parameters of the first motor, so they will not be repeated here. Users can refer to the parameter descriptions of the first motor.

H2-00	Motor Type Selection		default value	0
	setting range	0	Standard Induction Motor	
		1	Variable-Frequency Induction Motor	
H2-01	Motor Rated Power		default value	Model-dep
	setting range		0.1kW~1000.0kW	
H2-02	Motor Rated Voltage		default value	Model-dep
	setting range		1V~2000V	
H2-03	Motor Rated Current		default value	Model-dep
	setting range		0.01A ~ 655.35A (Drive Power ≤55kW) 0.1A ~ 6553.5A (Drive Power >55kW)	

H2-04	Motor Rated Frequency		default value	Model-dep
	setting range		0.01Hz~Maximum Frequency	
H2-05	Motor Rated Speed		default value	Model-dep
	setting range		1rpm~65535rpm	
H2-06	Induction Motor Stator Resistance		default value	Model-dep
	setting range		0.001Ω ~65.535Ω (Drive Power <=55kW) 0.0001Ω ~6.5535Ω (Drive Power >55kW)	
H2-07	nduction Motor Rotor Resistance		default value	Model-dep
	setting range		0.001Ω ~65.535Ω (Drive Power <=55kW) 0.0001Ω ~6.5535Ω (Drive Power >55kW)	
H2-08	Induction Motor Leakage Inductance		default value	Model-dep
	setting range		0.01mH~655.35mH(Drive Power <=55kW) 0.001mH~65.535mH(Drive Power >55kW)	
H2-09	Induction Motor Mutual Inductance		default value	Model-dep
	setting range		0.1mH~6553.5mH(Drive Power <=55kW) 0.01mH~655.35mH(Drive Power >55kW)	
H2-10	Induction Motor No-Load Current		default value	Model-dep
	setting range		0.01A~H2-03(Drive Power <=55kW) 0.1A~H2-03(Drive Power >55kW)	
H2-27	Encoder Line Count		default value	1024
	setting range		1~65535	
H2-28	Encoder Type		default value	0
	setting range	0: ABZ Incremental Encoder 1: UVW Incremental Encoder 2: Resolver 3: Sin/Cos Encoder 4: UVW Encoder (Reduced-Wire)		
H2-29	Speed Feedback PG Selection	default value	0	
	setting range	0: Local PG 1: Extended PG 2: PULSE Input (DI5)		
H2-30	ABZ Encoder AB Phase Sequence	default value	0	
	setting range	0	Forward	
		1	Reverse	

H2-31	Encoder Mounting Angle	default value	0	
	setting range		0.0°~359.9°	
H2-32	UVW Encoder UVW Phase Sequence		default value	0
	setting range	0	Forward	
		1	Reverse	
H2-33	UVW Encoder Offset Angle		default value	0.0°
	setting range		0.0°~359.9°	
H2-34	Resolver Pole Pairs		default value	1
	setting range		1~65535	
H2-36	Speed Feedback PG Disconnection Detection Time		default value	0.0s
	setting range		0.0：Disabled 0.1s~10.0s	
H2-37	Tuning Selection		default value	0
	setting range	0	No Operation	
		1	Induction Motor Static Tuning	
		2	Induction Motor Full Tuning	
		11	Synchronous Motor Static Self-Learning (E)	
		12	Synchronous Motor No-Load Dynamic Self-Learning (E)	
H2-38	Speed Loop Proportional Gain 1		default value	30
	setting range		1~100	
H2-39	Speed Loop Integral Time 1		default value	0.50s
	setting range		0.01s~10.00s	
H2-40	Switching Frequency 1		default value	5.00Hz
	setting range		0.00~H2-43	
H2-41	Speed Loop Proportional Gain 2		default value	15
	setting range		0~100	
H2-42	Speed Loop Integral Time 2		default value	1.00s
	setting range		0.01s~10.00s	
H2-43	Switching Frequency 2		default value	10.00Hz
	setting range		H2-40~Maximum Frequency	

H2-44	Vector Control Slip Gain		default value	100%
	setting range		50% ~200%	
H2-45	Speed Loop Filter Time Constant		default value	0.050s
	setting range		0 .000s~0. 100s	
H2-46	Vector Control Over-Excitation Gain		default value	64
	setting range		0~200	
H2-47	Torque Limit Source (Speed Control Mode)		default value	0
	setting range	0	H2-48 Setting	
		1	AI1	
		2	AI2	
		3	AI3	
		4	PULSE Setting	
		5	Communication given	
		6	MIN(AI1, AI2)	
		7	MAX(AI1, AI2)	
H2-48	Torque Limit Digital Setting (Speed Control Mode)		default value	150.0%
	setting range		0.0%~200.0%	
H2-51	Excitation Regulation Proportional Gain		default value	2000
	setting range		0~20000	
H2-52	Excitation Regulation Integral Gain		default value	1300
	setting range		0~20000	
H2-53	Torque Regulation Proportional Gain		default value	2000
	setting range		0~20000	
H2-54	Torque Regulation Integral Gain		default value	1300
	setting range		0~20000	
H2-55	Speed Loop Integral Attribute		default value	0
	setting range		Bit 0: Integral Separation 0: Disabled 1: Enabled	
H2-61	Second Motor Control Mode		default value	2
	setting range		2	V/F control
H2-62	setting range		0	Same as Motor 1

			1	Acc/Dec Time 1
		2		Acc/Dec Time 2
		3		Acc/Dec Time 3
		4		Acc/Dec Time 4
H2-63	Second Motor Torque Boost	default value		Model-dep
	setting range	0.0%：Auto Torque Boost 0.1% 30.0%		
H2-65	Second Motor Oscillation Suppression Gain	default value		Model-dep
	setting range	0~100		

H5 Group (control parameter optimization)

H5-00	DPWM Switching Upper Limit Frequency	default value	8.00HZ
	setting range	0.00HZ~P0-10(Maximum Frequency)	

This is only valid for V/F control. It determines the pulse generation method during asynchronous motor V/F operation. Values below this number use 7-segment continuous modulation, and values above use 5-segment discontinuous modulation.

In 7-segment continuous modulation, the driver's switching loss is large, but the current ripple is small. In 5-segment discontinuous modulation, the switching loss is small, but the current ripple is large. However, it may lead to motor operation instability at high frequencies. Generally, it does not need to be modified. For information on V/F operation instability, please refer to Function code P3-11. For information on driver loss and temperature rise, please refer to Function code P0-15.

H5-01	PWM Modulation Mode		default value	0
	setting range	0	Asynchronous Modulation	
		1	Synchronous Modulation	

This is only valid for V/F control. Synchronous modulation means that the carrier frequency changes linearly with the output frequency to keep their ratio (carrier ratio) constant. It is generally used when the output frequency is high, which is beneficial for the output voltage quality.

At lower output frequencies (below 100Hz), synchronous modulation is generally not needed because the ratio of the carrier frequency to the output frequency is relatively high, and the advantages of asynchronous modulation are more obvious.

When the operating frequency is higher than 85Hz, synchronous modulation takes effect. Below this frequency, the asynchronous modulation mode is fixed.

H5-02	Dead-Time Compensation Mode		default value	1
	setting range	0	No Compensation	
		1	Compensation Mode 1	
		2	Compensation Mode 2	

This parameter generally does not need to be modified. It is only necessary to try switching to different compensation modes when there are special requirements for the output voltage waveform quality or when the motor exhibits abnormal oscillations. It is recommended to use compensation mode 2 for high-power applications.。

H5-03	Random PWM Depth		default value	0
	setting range	0	Disabled	
		1~10	Random PWM Depth Level	

Setting random PWM can make the monotonous and harsh motor sound softer and help reduce external electromagnetic interference. When the random PWM depth is set to 0, random PWM is disabled. Adjusting different depths of random PWM will achieve different effects.

H5-04	Fast Current Limit Enable		default value	1
	setting range	0	Disabled	
		1	Enabled	

Enabling the fast current limiting function can minimize the occurrence of overcurrent faults in the driver and ensure uninterrupted operation of the driver. If an overcurrent fault occurs during fast current limiting, the alarm fault Err40 will be reported, indicating that the driver is overloaded and needs to stop.

H5-05	Zero-Speed Detection Threshold	default value	0
	setting range	0~100	

This is used to set the current detection compensation of the driver. Setting it too large may lead to a decrease in control performance. Generally, it does not need to be modified.

H5-06	Undervoltage Threshold	default value	350
	setting range	200~450	

This is used to set the voltage value for the driver's undervoltage fault Err09. The voltage points for drivers of different voltage levels are as follows:

Single-phase 220V or three-phase 220V: 200V

Three-phase 380V: 350V

Three-phase 480V: 450V

H5-07	0Hz Output Function		default value	1
	setting range	0	No Output	
		1	Normal Output	
		2	DC Braking (Braking Current = P6-13)	

At zero HZ, you can choose between normal output, no output, and DC braking output. The braking current is P6-13.

H5-08	Dead-Time Adjustment	default value	150%
	setting range	100%~200%	

This is set for the 1140V voltage level. Adjusting this value can improve the effective utilization rate of the voltage. Setting it too small may easily lead to system instability. It is not recommended for users to modify it.

H6 Group: Analog Input Curve Settings

H6-00	Analog Input 4 (AI4) Minimum Input	default value	0.00V
	setting range	-10.00V~H6-02	
H6-01	AI4 Minimum Input Corresponding Setting	default value	0.0%
	setting range	-100.0%~100.0%	
H6-02	AI4 Breakpoint 1 Input	default value	3.00V
	setting range	H6-00~H6-04	
H6-03	AI4 Breakpoint 1 Corresponding Setting	default value	30.0%
	setting range	-100.0%~100.0%	
H6-04	AI4 Breakpoint 2 Input	default value	6.00V
	setting range	H6-02~H6-06	
H6-05	AI4 Breakpoint 2 Corresponding Setting	default value	60.0%
	setting range	-100.0%~100.0%	
H6-06	AI4 Maximum Input	default value	10.00V

	setting range	H6-06~10.00V	
H6-07	AI4 Maximum Input Corresponding Setting	default value	100.0%
	setting range	-100.0%~100.0%	
H6-08	Analog Input 5 (AI5) Minimum Input	default value	0.00V
	setting range	-10.00V~H6-10	
H6-09	AI5 Minimum Input Corresponding Setting	default value	0.0%
	setting range	-100.0%~100.0%	
H6-10	AI5 Breakpoint 1 Input	default value	3.00V
	setting range	H6-08~H6-12	
H6-11	AI5 Breakpoint 1 Corresponding Setting	default value	30.0%
	setting range	-100.0%~100.0%	
H6-12	AI5 Breakpoint 2 Input	default value	6.00V
	setting range	H6-10~H6-14	
H6-13	AI5 Breakpoint 2 Corresponding Setting	default value	60.0%
	setting range	-100.0%~100.0%	
H6-14	AI5 Maximum Input	default value	10.00V
	setting range	H6-14~10.00V	
H6-15	AI5 Maximum Input Corresponding Setting	default value	100.0%
	setting range	-100.0%~100.0%	

Curves 4 and 5 have functions similar to those of Curves 1 - 3. However, while Curves 1 - 3 are straight lines, Curves 4 and 5 are 4-point curves, enabling more flexible corresponding relationships. The following is a schematic diagram of Curves 4 - 5.

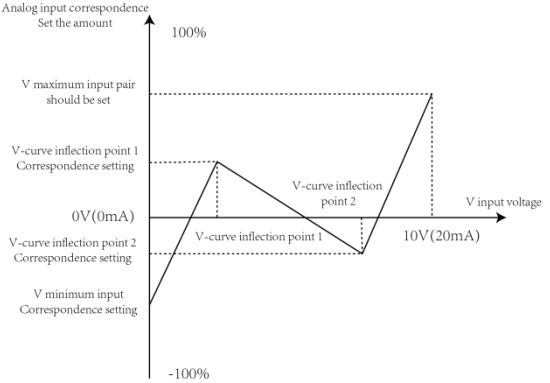

Curves 4 - 5 Diagram

When setting Curves 4 and 5, it should be noted that the minimum input voltage, inflection point 1 voltage, inflection point 2 voltage, and maximum voltage of the curves must increase in sequence.

The analog input curve selection parameter P is used to determine how analog inputs AI1 - AI3 select among the five curves.

H6-16	AI1Setting Jump Point	default value	0.0%
	setting range	-100.0%~100.0%	
H6-17	AI1 Setting Jump Range	default value	0.5%
	setting range	-100.0%~100.0%	
H6-18	AI2 Setting Jump Point	default value	0.0%
	setting range	-100.0%~100.0%	
H6-19	AI2 Setting Jump Range	default value	0.5%
	setting range	0.0%~100.0%	
H6-20	AI3 Setting Jump Point	default value	0.0%
	setting range	-100.0%~100.0%	
H6-21	AI3 Setting Jump Range	default value	0.5%
	setting range	0.0%~100.0%	

Analog inputs AI1 - AI3 all have a setpoint jump function.

The jump function means that when the analog input fluctuates around a jump point, the corresponding setpoint of the analog input is fixed at the value of the jump point.

For example: If the voltage of analog input AI1 fluctuates around 5.00V within a range of 4.90V - 5.10V, with the minimum input of 0.00V corresponding to 0.0% and the maximum input of 10.00V

corresponding to 100.0%, the detected corresponding setpoint of AI1 fluctuates between 49.0% - 51.0%. By setting the AI1 setpoint jump point H6-16 to 50.0% and the AI1 setpoint jump amplitude H6-17 to 1.0%, after the jump function processes the AI1 input, the corresponding setpoint of the AI1 input is fixed at 50.0%. AI1 is transformed into a stable input, eliminating the fluctuations.

H8 Group: Point-to-Point Communication

H8-00	Point-to-Point Communication Function Selection	default value	0
	setting range	0: Disabled, 1: Enabled	

This group is used to select whether the point-to-point communication function is valid.

Point-to-point communication refers to direct data communication between two or more A8 frequency inverters, implemented using CANlink. It is used to enable a master device to set the target frequency and target torque of one or more slave devices based on its own frequency or torque signals. When connecting the CANlink cards of multiple frequency inverters, the CANlink card of the end frequency inverter should have the terminal resistor connected. The connection method is described in the appendix.

When point-to-point communication is valid, the CANlink communication addresses of the master and slave devices are automatically matched internally, without the need for special settings.

The point-to-point communication rate is set via Pd-00.

H8-01	Master/Slave Control	default value	0
	setting range	0: Master, 1: Slave	

This parameter is used to select whether the frequency inverter is a master or a slave in point-to-point communication. When setting point-to-point communication, only the CANlink communication baud rate needs to be set. The communication address is automatically assigned based on whether the current device is a master or a slave.

H8-02	Master-Slave Information Interaction	default value	011

	setting range	Units digit: Slave command following 0: Slave does not follow master's run command 1: Slave follows master's run command Bit 10: Slave fault information transmission 0: Slave fault information not transmitted 1: Slave fault information transmitted Bit 100: Master displays slave offline 0: Master does not report fault when slave is offline 1: Master reports fault (ERR-16) when slave is offline

When in master-slave control mode and P0-02 = 2 (communication control), if the units digit of this value is set to 1, the slave device follows the master device's run/stop command;

If the tens digit of the slave device is set to 1, the slave device sends fault information to the master device when it has a fault;

If the hundreds digit of the master device is set to 1, an alarm is generated when a slave device drops out.

H8-03	Slave Received Data Function Selection	default value	0
	setting range	0: Master operating frequency, 1: Master target frequency	

In master-slave control mode, both the master and slave devices set the Function code to 0, and they communicate with each other according to the master-slave control message.

H8-04	Received Data Offset (Torque)	default value	0%
	setting range	-100.00%~100.00%	
H8-05	Received Data Gain(Torque)	default value	1.00
	setting range	-10.00~100.00	

In droop control mode, both the master and slave devices set the Function code to 1, and they communicate with each other according to the droop control message.

The above two function parameters are mainly used to correct the received torque data, allowing users to customize the relationship between the torque commands of the master and slave devices.

If the zero offset is represented by b, the gain is represented by k, the data received by the slave device is represented by x, and the actually used data is represented by y, then y = kx + b; the range is -100.00% - 100.00%.

H8-06	Point-to-Point Communication Disconnection Detection Time	default value	0
	setting range	0.0s~10.0s	

Set the communication interruption detection time for the master or slave device in point-to-point communication. A value of 0 means no detection.

H8-07	Point-to-Point Communication Master Data Transmission Cycle	default value	0.001s
	setting range	0.001s~10.000s	

Set the data transmission period of the master device in point-to-point communication.

H8-08	Frequency Received Data Offset	default value	0 %
	setting range	-100.00%~100.00%	
H8-09	Frequency Received Data Gain	default value	1.00
	setting range	-10.00~100.00	

The above two function parameters are mainly used to correct the received frequency data, allowing users to customize the relationship between the frequency commands of the master and slave devices.

If the zero offset is represented by b, the gain is represented by k, the data received by the slave device is represented by x, and the actually used data is represented by y, then y = kx + b; the range is -100.00% - 100.00%.

H8-11	Slave Frequency Reverse Maximum Deviation	default value	0.5HZ
	setting range	0.2Hz~10.0Hz	

In master-slave control mode, this Function code is valid. Setting this value can ensure that the speeds of the master and slave devices are synchronized within a viewing window.

H9 Group: Sleep/Wake Function Parameters

This group of parameters is mainly used to implement the sleep and wake functions in constant-pressure water supply applications. When using them, please pay attention to the following matters:

(1)Select the method for controlling the sleep function according to the application requirements via H9-00.

(2)If the frequency source uses PID, whether the PID operates during the sleep state is affected by the Function code PA-28. In this case, PID operation during shutdown (PA-28 = 1) must be selected.

(3)Generally, set the wake frequency ((100.0% - H9-03 wake difference) * P0-10 Maximum Frequency) to be greater than the sleep frequency H9-01.

H9-00	Sleep/Wake Enable	default value	0
	setting range	0~2	

0: Sleep function is invalid.

1: The sleep function is controlled by the PID setpoint and feedback value. In this case, the frequency source P0-03 of the frequency inverter must be PID.

2: The sleep function is controlled based on the operating frequency.

During the operation of the frequency inverter, when the set frequency is less than or equal to the sleep frequency H9-01, it enters the sleep state. Conversely, if the set frequency of the frequency inverter is greater than the wake frequency (H9-03 wake difference * P0-10 Maximum Frequency), it enters the wake state.

H9-01	Sleep Frequency	default value	30.00Hz
	setting range	0.00Hz～50.00Hz	

When the sleep function is valid and the operating frequency is lower than this value, after the sleep delay time H9-02, the frequency inverter starts to sleep (stop). Refer to the following diagram: A = PID output; B = PID feedback value.

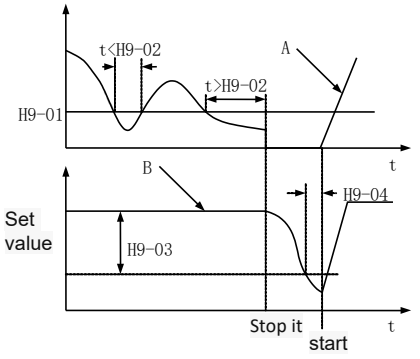

Sleep frequency diagram

H9-02	Sleep Delay	default value	60.0S
	setting range	0.0s～3600.0s	

Set the sleep delay time. The function is as shown in the above diagram.

H9-03	Wake-up Difference	default value	10.0%
	setting range	0.0%～100.0%	

When H9-00 = 1, this parameter takes the maximum pressure as the reference object, that is, the maximum pressure is 100%.

When H9-00 = 2, this parameter takes the Maximum Frequency P0-10 as the reference object, that is, the Maximum Frequency is 100%.

When the difference between the given value and the feedback value for wake exceeds the value defined by this parameter, after the wake delay H9-04, the PID regulator restarts.

PA-03 = 0 indicates positive action, and the wake value = setpoint - wake difference; PA-03 = 1 indicates reverse action, and the wake value = setpoint + wake difference.

• C = Wake value when PA-03 = 1.

• D = Wake value when PA-03 = 0.

• E = When the feedback value is greater than the wake value and the duration exceeds the parameter H9-04 (wake delay), the PID function restarts.

• F = When the feedback value is less than the wake value and the duration exceeds the parameter H9-04 (wake delay), the PID function restarts.

Refer to the following diagram:

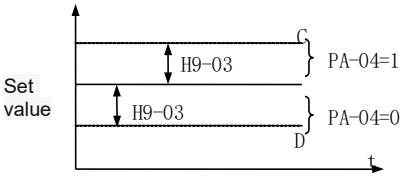

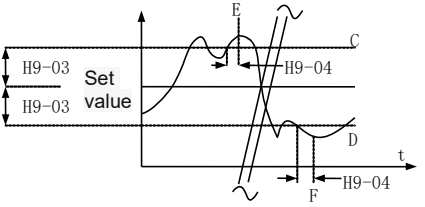

H9-04	Wake-up Delay	default value	0.5s
	setting range	0.0s～3600.0s	

Set the wake delay time. The function is as shown in the above diagram.

H9-05	Frequency Mode Selection During Sleep Delay	default value	0
	setting range	0～1	

0: PID automatic regulation. 1: Sleep frequency H9-01.

HA Group: Brake Parameters

HA-00	Brake Control Enable Selection	default value	0
	setting range	0～1	

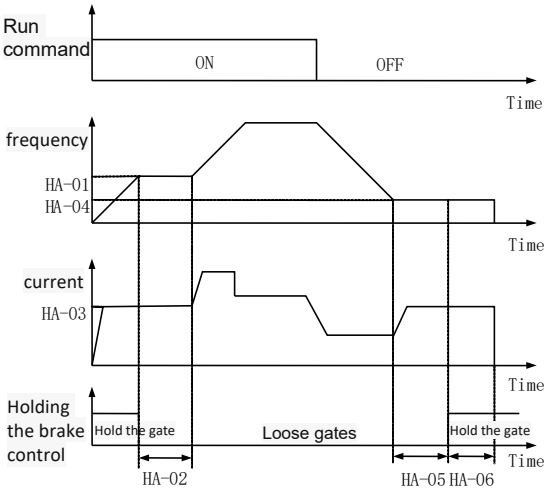

Diagram of the control process of holding the brake

The process of holding the gate is as follows:

1） After the frequency inverter receives the run command, it accelerates to the brake release frequency set by HA-01.

2） When the frequency reaches the frequency set by HA-01, the "brake control output" function of DO Terminal 45 outputs a brake release signal to control the brake to release.

3） It operates at a constant speed at the brake release frequency. During this period, the control output current of the frequency inverter does not exceed the current set by HA-03.

4）After the frequency inverter operates at the brake release frequency for the time set by HA -02, it starts to accelerate to the set frequency.

5） After the frequency inverter receives the stop command, it decelerates to the frequency set by HA-04 and operates at a constant speed at this frequency.

6）When the operating frequency reaches the frequency set by HA-04, after the brake frequency maintenance time set by HA-05, the "brake control output" function of DO Terminal 45 outputs a brake engagement signal to control the brake to engage.

7）After the switch output "brake control" Terminal outputs the brake engagement signal for the time set by HA-06, the frequency inverter blocks the output and enters the stop state.

HA-01	Brake Release Frequency	default value	2.50HZ
	setting range	0.00HZ～20.00HZ	

When the frequency reaches this set value, the switch quantity output "Brake Control" will trigger the Terminal to output a brake release signal (No. 45) to control the brake to disengage. This value can be set according to the motor's rated slip frequency. In V/F control mode, it can be set slightly higher.

HA-02	Brake Release Frequency	default value	1.0s
	setting range	0.0s～20.0s	

After the switch output "brake control" Terminal outputs the brake engagement signal, the frequency inverter pauses acceleration during this set time. After reaching this set time, it starts to accelerate again. Please set this time reasonably according to the time required for the brake to release mechanically.

HA-03	Brake Release Frequency Hold Time	default value	120.0%
	setting range	50.0%～200.0%	

Before the frequency inverter starts to accelerate from the brake release frequency, that is, before the brake mechanism is completely released, the current is limited to this value.

HA-04	Brake Engagement Frequency	default value	1.50Hz
	setting range	0.00HZ～20.00HZ	

After the frequency inverter receives the stop command, it decelerates to the brake frequency set by HA-04 and operates at a constant speed at this frequency, waiting to output the brake control signal.

HA-05	Brake Engagement Delay Time	default value	0.0s
	setting range	0.0s～20.0s	

When the operating frequency reaches the brake frequency, it delays for the brake waiting time set by HA-05. Then the "brake control" Terminal of the switch output outputs a brake release signal to control the brake.

HA-06	Brake Engagement Frequency Hold Time	default value	1.0s
	setting range	0.0s～20.0s	

After the "brake control" Terminal of the switch output outputs the brake release signal, it maintains this state for the time set by HA-06 to ensure that the brake mechanism is completely engaged. Then the frequency inverter blocks the output and enters the stop state.。

HA-07	Brake Release Torque Current Detection Value	default value	5.0%
	setting range	0.0%～100.0%	

The relay only outputs a brake release signal when the torque current exceeds the preset value of HA-07. When it is set to zero, the relay does not function.

HC Group Analog input /output calibration

HC-00	AI1 Actual Voltage 1	default value	factory calibration
	setting range	0.500V~4.000V	
HC-01	AI1 Display Voltage 1	default value	factory calibration
	setting range	0.500V~4	.000V
HC-02	AI1 Actual Voltage 2	default value	factory calibration
	setting range	6.000V~9.999V	
HC-03	AI1 Display Voltage 2	default value	factory calibration
	setting range	6.000V~9.999V	
HC-04	AI2 Actual Voltage 1	default value	factory calibration
	setting range	0.500V~4.000V	
HC-05	AI2 Display Voltage 1	default value	factory calibration
	setting range	0.500V~4.000V	
HC-06	AI2 Actual Voltage 2	default value	factory calibration
	setting range	6.000V~9.999V	
HC-07	AI2 Display Voltage 2	default value	factory calibration
	setting range	-9.999V~10.000V	
HC-08	AI3 Actual Voltage 1	default	factory calibration

		value	
	setting range	-9.999V~10.000V	
HC-09	AI3 Display Voltage 1	default value	factory calibration
	setting range	-9.999V~10.000V	
HC-10	AI3 Actual Voltage 2	default value	factory calibration
	setting range	-9.999V~10.000V	
HC-11	AI3 Display Voltage 2	default value	factory calibration
	setting range	-9.999V~10.000V	

This group of Function codes is used to calibrate the analog inputs AI1 - AI3 to eliminate the influence of zero offset and gain of the analog input ports. These function parameters have been calibrated at the factory. When restoring to the default values, they will be restored to the values after factory calibration. Generally, calibration is not required at the application site.

"Actual Voltage" refers to the actual voltage measured by a measuring instrument such as a multimeter. The "display voltage" refers to the sampled voltage display value of the driver, as shown in the U0 group analog input voltages before calibration (U0-21, U0-22, U0-23).

During calibration, input two voltage values at each analog input port, and accurately input the values measured by the multimeter and the values read from the U0 group into the above Function codes. Then the driver will automatically perform zero offset and gain calibration of the analog inputs.

HC-12	H01 Target Voltage 1	default value	factory calibration
	setting range	0.500V~4.000V	
HC-13	H01 Actual Voltage 1	default value	factory calibration
	setting range	0.500V~4.000V	
HC-14	H01 Target Voltage 2	default value	factory calibration
	setting range	6.000V~9.999V	
HC-15	H01 Actual Voltage 2	default value	factory calibration
	setting range	6.000V~9.999V	
HC-16	H02 Target Voltage 1	default value	factory calibration
	setting range	0.500V~4.000V	
HC-17	H02 Actual Voltage 1	default value	factory calibration
	setting range	0.500V~4.000V	
HC-18	H02 Target Voltage 2	default value	factory calibration

	setting range	6.000V~9.999V	
HC-19	H02 Actual Voltage 2	default value	factory calibration
	setting range	6.000V~9.999V	

This group of Function codes is used to calibrate the analog output AO. These function parameters have been calibrated at the factory. When restoring to the factory values, they will be restored to the values after factory calibration. Generally, calibration is not required at the application site.

The "target voltage" refers to the theoretical output voltage value of the driver. "Actual Voltage" refers to the actual output voltage value measured by an instrument such as a multimeter.

U0 Group - Basic Monitoring Parameters

The U0 parameter group is used to monitor the running status information of the driver. Customers can view it through the panel to facilitate on-site debugging, or they can read the parameter group values through communication for upper-computer monitoring. Among them, U0-00 - U0-31 are the running and stop monitoring parameters defined in P7-03 and P7-04. For the specific parameter Function codes, parameter names, and minimum units, refer to the U0 group parameter table.

Function Code	Name	Minimum Unit
U0-00	Operating Frequency (Hz)	0.01Hz
U0-01	Set Frequency (Hz)	0.01Hz
U0-02	DC Bus Voltage (V)	0.1V
U0-03	Output Voltage (V)	1V
U0-04	Output Current (A)	Inverter power ≤ 55.0kW: 0.01A
		Inverter power > 55.0kW: 0.1A
U0-05	Output Power (kW)	0.1kW
U0-06	Output Torque (%)	0.10%
U0-07	DI Input Status	1
U0-08	DO Output Status	1
U0-09	AI1 Voltage (V)	0.01V
U0-10	AI2 Voltage (V)	0.01V
U0-11	AI3 Voltage (V)	0.01V
U0-12	Counter Value	1
U0-13	Length Value	1
U0-14	Load Speed Display	1
U0-15	PID Setting	1
U0-16	PID Feedback	1

U0-17	PLC Stage	1
U0-18	PULSE Input Frequency (Hz)	0.01kHz
U0-19	Feedback Speed (Unit: 0.1Hz)	0.1Hz
U0-20	Remaining Running Time	0.1Min
U0-21	AI1 Voltage (Pre-Calibration)	0.001V
U0-22	AI2 Voltage (Pre-Calibration)	0.001V
U0-23	AI3 Voltage (Pre-Calibration)	0.001V
U0-24	Motor Speed	0–65535
U0-25	Current Power-On Time	1Min
U0-26	Current Running Time	0.1Min
U0-27	PULSE Input Frequency	1Hz
U0-28	Communication Set Value	0.01%
U0-29	Encoder Feedback Speed (Hz)	0.01Hz
U0-30	Main Frequency X Display (Hz)	0.01Hz
U0-31	Auxiliary Frequency Y Display (Hz)	0.01Hz
U0-32	AI1 Motor Temperature Value	0–200
U0-33	AI2 Motor Temperature Value	0–200
U0-34	Motor Temperature Value	1°C
U0-35	Target Torque (%)	0.10%
U0-36	Resolver Position	1
U0-37	Power Factor Angle	0.1°
U0-38	ABZ Position	1
U0-39	V/F Separation Target Voltage (V)	1V
U0-40	V/F Separation Output Voltage (V)	1V
U0-41	DI Digital Input Terminal Status (Direct Display)	1
U0-42	DO Input Status (Direct Display)	1
U0-43	DI Digital Input Terminal Function Status (Functions 01–40)	1
U0-44	DI Digital Input Terminal Function Status (Functions 41–80)	1
U0-45	Fault Information	1
U0-59	Set Frequency (%)	0.01%

Chapter 10 EMC (Electromagnetic Compatibility)

10.1 Definition

Electromagnetic Compatibility (EMC) refers to the ability of electrical equipment to operate stably in an electromagnetic interference (EMI) environment without causing interference to the electromagnetic environment while maintaining its intended functionality.

10.2 EMC Standards

In accordance with the national standard **GB/T 12668.3**, the drive must comply with requirements for both **electromagnetic emissions** and **immunity to electromagnetic interference**.

Our products currently adhere to the latest international standard:

IEC/EN 61800-3:2004 (Adjustable speed electrical power drive systems – Part 3: EMC requirements and specific test methods), which is equivalent to the national standard **GB/T 12668.3**.

IEC/EN 61800-3 evaluates drives based on two key aspects:

(1)**Electromagnetic Emissions** – Tests include **radiated emissions**, **conducted emissions**, and **harmonic distortion** (required for drives used in civilian applications).

(2)**Immunity to Electromagnetic Interference** – Tests include:

Conducted immunity

Radiated immunity

Surge immunity

Fast transient burst immunity

Electrostatic discharge (ESD) immunity

Low-frequency power supply immunity

Specific test items:

Voltage dips, interruptions, and variations

Commutation notch immunity

Harmonic input immunity

Input frequency variation

Input voltage unbalance

Input voltage fluctuation

By rigorously following **IEC/EN 61800-3** and implementing the installation guidelines in **Section 10.3**, our products achieve excellent EMC performance in typical industrial environments.

10.3 EMC Guidelines

10.3.1 Harmonic Effects

High-order harmonics in the power supply may damage the drive. In areas with poor power grid quality, it is recommended to install an **AC input reactor**.

10.3.2 Electromagnetic Interference & Installation Precautions

EMC refers to the ability of electrical equipment to operate stably in an EMI environment without causing interference.

Installation Guidelines:

(1)Ensure proper grounding of the **drive** and other electrical equipment.

(2)Avoid parallel routing of **power cables** (input/output) and **low-voltage signal cables** (e.g., control lines). If possible, arrange them perpendicularly.

(3)Use **shielded cables** for drive output power lines, or route them through **steel conduits**, ensuring the shield is properly grounded. For sensitive equipment, use **twisted-pair shielded control cables** with grounded shields.

10.3.3 Mitigating Interference from Nearby EMI Sources

Common EMI sources affecting drives include **relays, contactors, or electromagnetic brakes**. If interference causes malfunctions, consider the following solutions:

(1)Install **surge suppressors** on interfering devices.

(2)Add an **input filter** to the drive.

(3)Use **shielded cables** for control and sensor wiring, with proper grounding.

10.3.4 Mitigating Drive-Induced Interference on Peripheral Equipment

Drive-generated noise falls into two categories:

Radiated interference

Conducted interference

These can cause malfunctions in nearby devices due to electromagnetic/electrostatic induction. Solutions include:

(1)**For sensitive equipment (meters, sensors, receivers):**

Keep them **far from the drive**.

Avoid parallel routing or bundling of **signal and power cables**.

Use **shielded cables** with proper grounding.

Install a **ferrite core** (30–1000MHz suppression range) on drive output cables, winding 2–3 turns in the same direction. For severe cases, add an **EMC output filter**.

(2)**For shared power supply interference (conducted noise):**

If other measures fail, install an **EMC filter** between the drive and power supply.

(3)**For ground-loop interference:**

Use **separate grounding** for peripheral devices to avoid noise from drive leakage currents.

10.3.5 Leakage Current & Countermeasures

Drive operation may produce two types of leakage current:

(1)Ground leakage current

(2)**Line-to-line leakage current**

1. Ground Leakage Current Causes & Solutions:

●Distributed capacitance between cables and ground increases leakage current.

●**Solution:** Shorten the distance between the drive and motor to reduce capacitance.

●Higher carrier frequencies increase leakage. **Solution:** Lower the carrier frequency (note: may increase motor noise).

●Installing a **reactor** can also mitigate leakage.

●Larger motors (higher current) inherently produce greater leakage.

2. Line-to-Line Leakage Current Causes & Solutions:

●Distributed capacitance between output cables, combined with high-frequency harmonics, may cause resonance-induced leakage.

●This can trigger false trips in **thermal relays**.

●**Solution:** Reduce carrier frequency or install an **output reactor**.

●**Recommendation:** Avoid thermal relays between drive and motor; instead, rely on the drive's **electronic overcurrent protection**.

Chapter 11 Maintenance and Troubleshooting

11.1 Routine Maintenance of the Drive

11.1.1 Daily Inspection

Environmental factors such as temperature, humidity, dust, and vibration can accelerate component aging, potentially causing malfunctions or shortening the drive's service life. Regular maintenance is essential.

Daily Checks:

1.Abnormal motor noise during operation.

2.Unusual motor vibration.

3.Changes in the drive's installation environment.

4.Proper functioning of the drive's cooling fan.

Cleaning Procedures:

1.Keep the drive clean at all times.

2.Remove surface dust (especially metal particles) to prevent internal contamination.

3.Clean oil buildup on the cooling fan.

11.1.2 Periodic Maintenance

Inspect hard-to-reach areas periodically:

1.Check and clean air vents.

2.Tighten loose screws.

3.Inspect for corrosion.

4.Check terminals for arcing marks.

5.Perform insulation resistance tests on the main circuit.

Note:

- Use a 500V DC megohmmeter for insulation tests. Disconnect the main circuit from the drive first.
- Do not test control circuit insulation with a megohmmeter.
- High-voltage testing is unnecessary (completed before shipment).

11.1.3 Replacement of Wear Components

Key wear components include cooling fans and filter electrolytic capacitors, with lifespans dependent on operating conditions:

Component	Lifespan
Cooling Fan	2–3 years
Electrolytic Capacitor	4–5 years

Failure Indicators:

1.Cooling Fan:

Causes: Bearing wear, blade aging.

Signs: Cracks in blades, abnormal noise/vibration at startup.

2.Electrolytic Capacitor:

Causes: Poor power quality, high ambient temperature, frequent load changes, electrolyte degradation.

Signs: Leakage, bulging safety valve, abnormal capacitance/insulation resistance.

11.1.4 Drive Storage

1.For short- or long-term storage: Store in the original packaging whenever possible.

2.Long-term storage (>2 years):

Recharge capacitors every 2 years by powering the drive for ≥5 hours.

Gradually raise input voltage to the rated value using a voltage regulator.

11.2 Warranty and Fault Handling

11.2.1 Warranty Terms

Free repair/replacement covers drive malfunctions under normal use for 18 months (from manufacturing date, verified by barcode).

Non-warranty cases (fee applies):

Damage from misuse (per manual guidelines).

Damage caused by fire, flooding, voltage surges, etc.

Unauthorized modifications or non-standard applications.

Service fees follow factory standards (contract terms take precedence).

11.2.2 Fault Alarms and Solutions

During faults, the drive halts motor output, triggers a fault relay, and displays an error code. Refer to the table below for common fault types and solutions.

Warning:

Do not attempt unauthorized repairs.

Contact our technical support or authorized dealers if the issue persists.

Fault Code Reference Table

(To be populated with specific error codes and remedies as per the manual.)

Display	Fault Name	Possible Causes	Corrective Actions
Err01	Inverter Unit Protection	1. Short circuit in drive output circuit 2. Excessive motor/drive wiring length 3. Loose internal connections	1. Eliminate external faults 2. Install reactor/output filter 3. Secure all connections

Err02	Acceleration Overcurrent	1. Ground/short circuit in output circuit 2. Vector control without parameter identification 3. Too short acceleration time 4. Improper torque boost/V/F curve 5. Low input voltage 6. Starting rotating motor 7. Sudden load during acceleration 8. Undersized drive	1. Eliminate external faults 2. Perform motor parameter identification 3. Increase acceleration time 4. Adjust torque/V/F curve 5. Adjust voltage to normal range 6. Use speed search start or wait for stop 7. Avoid sudden loading 8. Select higher power drive
Err03	Deceleration Overcurrent	1. Ground/short circuit in output circuit 2. Vector control without parameter ID 3. Too short deceleration time 4. Low input voltage 5. Sudden load during deceleration 6. Missing brake unit/resistor	1. Eliminate external faults 2. Perform parameter identification 3. Increase deceleration time 4. Adjust voltage 5. Avoid sudden loading 6. Install brake unit/resistor
Err04	Constant Speed Overcurrent	1. Output circuit fault 2. Vector control without parameter ID 3. Low voltage 4. Sudden loading 5. Undersized drive	1. Eliminate external faults 2. Perform parameter ID 3. Adjust voltage 4. Avoid sudden loading 5. Select higher power drive
Err05	Acceleration Overvoltage	1. High input voltage 2. External force driving motor 3. Too short acceleration time 4. Missing brake unit/resistor	1. Adjust voltage 2. Remove external force or install brake resistor 3. Increase acceleration time 4. Install brake unit/resistor
Err06	Deceleration Overvoltage	1. High input voltage 2. External force driving motor 3. Too short deceleration time 4. Missing brake unit/resistor	1. Adjust voltage 2. Remove external force or install brake resistor 3. Increase deceleration time 4. Install brake unit/resistor
Err07	Constant Speed Overvoltage	1. High input voltage 2. External force driving motor	1. Adjust voltage 2. Remove external force or install brake resistor
Err08	Control Power Fault	Input voltage out of specification	Adjust voltage to specified range
Err09	Undervoltage	1. Momentary power loss 2. Abnormal input voltage 3. DC bus voltage abnormal 4. Rectifier/buffer resistor fault 5. Drive board fault 6. Control board fault	1. Reset fault 2. Adjust voltage 3-6. Contact technical support

Err10	Drive Overload	1. Excessive load/motor stall 2. Undersized drive	1. Reduce load, check motor/mechanics 2. Select higher power drive
Err11	Motor Overload	1. Excessive load/motor stall 2. Undersized drive	1. Reduce load, check motor/mechanics 2. Select higher power drive
Err12	Input Phase Loss	1. Abnormal 3-phase input 2. Drive board fault 3. Surge protector fault 4. Main control board fault	1. Check input wiring 2-4. Contact technical support
Err13	Output Phase Loss	1. Abnormal motor wiring 2. Unbalanced 3-phase output 3. Drive board fault 4. Power module fault	1. Check wiring 2. Check motor windings 3-4. Contact technical support
Err14	Module Overheat	1. High ambient temperature 2. Blocked air vents 3. Fan failure 4. Thermistor fault 5. Inverter module fault	1. Improve cooling 2. Clean air vents 3. Replace fan 4. Replace thermistor 5. Replace module
Err15	External Device Fault	1. External fault signal via terminal DI 2. External fault via virtual IO	1-2. Reset operation
Err16	Communication Fault	1. Host device fault 2. Communication cable fault 3. Incorrect comm card setting (P0-28) 4. Incorrect FD parameter group	1. Check host wiring 2. Check cables 3-4. Correct parameter settings
Err17	Contactor Fault	1. Drive/power board fault 2. Contactor fault	1. Replace drive/power board 2. Replace contactor
Err18	Current Detection Fault	1. Hall sensor fault 2. Drive board fault	1. Replace Hall sensor 2. Replace drive board
Err19	Motor Tuning Fault	1. Incorrect motor parameters 2. Tuning timeout	1. Set correct nameplate parameters 2. Check motor wiring
Err20	Encoder Fault	1. Encoder type mismatch 2. Wiring error 3. Encoder failure 4. PG card fault	1. Set correct encoder type 2. Check wiring 3. Replace encoder 4. Replace PG card
Err21	EEPROM R/W Fault	1. EEPROM chip failure	1. Replace main control board
Err22	Drive Hardware Fault	1. Overvoltage condition 2. Overcurrent condition	1. Follow overvoltage procedure 2. Follow overcurrent procedure
Err23	Ground Fault	1. Motor ground short	1. Replace cable/motor
Err26	Operating Time Limit	1. Accumulated runtime reached set value	1. Clear records via parameter initialization

Err27/28	User-Defined Fault 1/2	1. Custom fault via terminal DI 2. Custom fault via virtual IO	1-2. Reset operation
Err29	Power-On Time Limit	1. Accumulated power-on time reached	1. Clear records via parameter initialization
Err30	Load Loss Fault	1. Running current < P9-64 setting	1. Check load connection or adjust P9-64/F9-65
Err31	PID Feedback Loss	1. Feedback < PA-26 setting	1. Check feedback signal or adjust PA-26
Err40	Cycle-by-Cycle Current Limit	1. Excessive load/motor stall 2. Undersized drive	1. Reduce load 2. Select higher power drive
Err41	Runtime Motor Change	1. Motor selection changed during operation	1. Stop drive before motor switching
Err42	Speed Deviation Fault	1. Incorrect encoder parameters 2. Missing parameter ID 3. Improper P9-69/P9-70 settings	1. Set correct encoder parameters 2. Perform parameter ID 3. Adjust detection parameters
Err43	Overspeed Fault	1. Incorrect encoder settings 2. Missing parameter ID 3. Improper P9-67/P9-68 settings	1. Check encoder wiring 2. Reduce carrier frequency/enhance cooling 3. Adjust parameters
Err45/46/47	Motor Overtemperature	1. Loose temp sensor wiring 2. Motor overheating	1. Check sensor wiring 2. Reduce carrier frequency/enhance cooling
Err51	Initial Position Error	1. Motor parameter deviation	1. Verify parameters (especially rated current)
A64	Back-EMF Learning Fault	Synchronous motor back-EMF learning error	Manually set correct P1-20 parameter

11.2.2 Common Faults and Troubleshooting Methods

During the operation of the drive, the following faults may occur. Refer to the methods below for basic troubleshooting:

No.	Fault Phenomenon	Possible Causes	Solutions
1	No display when powered on	- No grid voltage or voltage too low - Switch mode power supply failure on drive board - Rectifier bridge damaged - Buffer resistor failure - Control board/keypad failure - Disconnected cables between control/drive boards or keypad	- Check input power supply - Check DC bus voltage - Reconnect 8-pin and 28-pin ribbon cables - Contact manufacturer for service
2	Displays "88888"	- Poor connection between drive/control boards - Component failure on control board - Motor/motor cable ground short - Hall sensor fault - Low grid voltage	- Reconnect 8-pin and 28-pin cables - Contact manufacturer for service
3	"Err23" alarm at power-on	- Motor/output cable ground short - Drive failure	- Measure insulation resistance of motor/cables using megohmmeter - Contact manufacturer for service
4	Normal display at power-on, shows "88888" and stops after running	- Fan failure or blockage - Short circuit in control terminal wiring	- Replace fan - Eliminate external short circuit
5	Frequent "Err14" (Module Overheat)	- Carrier frequency set too high (P0-15) - Fan failure or air duct blocked - Internal component failure (thermocouple, etc.)	- Reduce carrier frequency - Replace fan/clean air duct - Contact manufacturer for service
6	Motor doesn't rotate after start	- Motor/motor cable issues - Incorrect parameter settings - Poor drive/control board connection - Drive board failure	- Verify motor wiring - Replace motor/clear mechanical fault - Check motor parameters - Contact manufacturer for service
7	DI terminal malfunction	- Parameter setting error - External signal error - Loose OP/+24V jumper - Control board failure	- Verify F4 group parameters - Check external signal wiring - Secure OP/+24V jumper - Contact manufacturer for service
8	Speed cannot increase (closed-loop vector)	- Encoder failure - Wrong/loose encoder wiring - PG card failure - Drive board failure	- Replace encoder/check wiring - Replace PG card - Contact manufacturer for service
9	Frequent overcurrent/ov	- Incorrect motor parameters - Improper acceleration/deceleration	- Reset motor parameters/perform tuning

	ervoltage faults	time - Load fluctuations	- Adjust accel/decel times - Contact manufacturer for service
10	"Err17" at power-on/runtime	- Soft-start contactor not engaged	- Check contactor cable connections - Verify contactor functionality - Check 24V power supply - Contact manufacturer for service
11	No display when powered on	- Control board component failure	- Replace control board

Appendix 1: Modbus Communication Protocol

This series of drives provides an RS485 communication interface and supports the Modbus-RTU slave protocol. Users can achieve centralized control via a PC or PLC, using this protocol to:

Set drive operation commands

Modify or read Function Code (FC) parameters

Monitor the drive's operating status and fault information

1. Protocol Specifications

The serial communication protocol defines the content and format of transmitted data, including:

Host polling/broadcast format

Host encoding method: Function Codes (FCs), transmitted data, error checking, etc.

Slave response format: Action confirmation, returned data, error checking, etc.

If a slave encounters an error or cannot execute the host's command, it returns a fault message to the host.

1.1 Application Mode

The drive connects to a "single-master, multi-slave" PC/PLC control network (RS485 bus) as a communication slave.

1.2 Bus Structure

Hardware Interface: Default: Control board terminals A+ and B-. Optional: EM485-01 expansion card.

Topology:

Single-master, multi-slave system. Each device has a unique slave address (1–247).

Only the master device (PC, PLC, HMI) initiates communication; slaves respond to queries.

Half-duplex transmission: Only one device can transmit data at a time.

Communication Transmission

Asynchronous serial, half-duplex.

Data is sent in frames. A new frame begins when the bus idle time exceeds 3.5-byte transmission time.

The drive's built-in Modbus-RTU slave protocol responds to host queries/commands with corresponding actions or data.

The VA series drives feature a built-in Modbus-RTU slave communication protocol, enabling them to respond to host "queries/commands" by executing corresponding actions and returning communication data responses.

The host device—which may be a personal computer (PC), industrial control equipment, or programmable logic controller (PLC)—can communicate with individual slaves or broadcast

messages to all subordinate devices. For unicast queries/commands, the addressed slave must return a response frame. For broadcast messages, no response from the slaves is required.

The Modbus protocol data format for this drive series is as follows

In RTU mode, each message transmission must begin with an idle interval of at least 3.5 character times. This timing, which varies with the baud rate (illustrated as T1-T2-T3-T4 in the diagram below), ensures reliable frame detection. The first field transmitted is the device address.

Transmitted characters are hexadecimal values (0–9, A–F).

All network devices continuously monitor the bus, including during idle intervals. Upon receiving the address field, each device decodes it to determine if the message is intended for itself.

A minimum 3.5-character idle time after the last transmitted character marks the end of a message, allowing a new message to begin thereafter.

The entire message frame must be transmitted as a continuous data stream.

If an idle period exceeds 1.5 character times mid-frame, the receiving device discards the incomplete message and treats the next byte as a new address field.

If a new message begins within 3.5 character times of the previous one, the receiver assumes it is a continuation of the prior message. This results in a CRC error, as the checksum validation will fail.

RTU mode format：

<table>
<tr><td>START</td><td>3.5 character times of idle time (frame preamble)</td></tr>
<tr><td>Slave Address (ADR)</td><td>Communication address range: 1-247</td></tr>
<tr><td>Command Code (CMD)</td><td>- 03: Read slave parameters
- 06: Write slave parameters</td></tr>
<tr><td>Data Content DATA(N-1)</td><td rowspan="4">Contains:
- Function Code parameter addresses
- Number of parameters
- Parameter values, etc.</td></tr>
<tr><td>Data Content DATA(N-2)</td></tr>
<tr><td>……</td></tr>
<tr><td>Data ContentDATA0</td></tr>
<tr><td>CRC CHK High Byte</td><td rowspan="2">Error detection value (CRC checksum upper byte)</td></tr>
<tr><td>CRC CHK Low Byte</td></tr>
<tr><td>END</td><td>3.5 character times of idle time (frame termination)</td></tr>
</table>

CMD(command instruction) and DATA(data description)

Command code：03H, read N words|(with a maximum of 12 words)

For example: drive with slave address 01, start Function codeP002 parameter address to read 2 values.

Master drive command information

ADR	01H
CMD	03H
Start address high byte	F0H
Start address low byte	02H
Register count high byte	00H
Register count low byte	02H
CRC CHK low byte	To be calculated value of CRC CHK
CRC CHK high byte	

Slave drive respond information Pd-05 set as 0

ADR	01H
CMD	03H
Byte count high byte	00H
Byte count low byte	04H
Data F002H high byte	00H
Data F002Hlow byte	00H
Data F003H high byte	00H
Data F003Hlow byte	01H
CRC CHK low byte	To be calculated value of CRC CHK
CRC CHK high byte	

Pd-05 set as 1

ADR	01H
CMD	03H
Byte count	04H
Data F002H high byte	00H
Data F002Hlow byte	00H
Data F003H high byte	00H
Data F003Hlow byte	01H
CRC CHK low byte	To be calculated value of CRC CHK
CRC CHK high byte	

The 06H command is used to write a single 16-bit value (1 word) to a specified register address in the slave device (e.g., an VA series drive).。

Master drive command information

ADR	02H
CMD	06H
Data address high byte	F0H
Data address low byte	0AH
Data content high byte	13H
Data content low byte	88H
CRC CHK low byte	To be calculated value of CRC CHK
CRC CHK high byte	

Slave drive respond information

ADR	02H
CMD	06H
Data address high byte	F0H
Data address low byte	0AH
Data content high byte	13H
Data content low byte	88H
CRC CHK low byte	To be calculated value of CRC CHK
CRC CHK high byte	

Check Method – CRC (Cyclical Redundancy Check): The CRC method is employed in the RTU (Remote Terminal Unit) frame format, and the message includes an error-detection field based on the CRC approach. The CRC field, which covers the entire content of the message, consists of two bytes containing a 16-bit binary value. This value is calculated by the transmitting device and appended to the message. The receiving device recalculates the CRC for the received message and compares it with the value in the received CRC field. If the two CRC values do not match, it indicates a transmission error.

For CRC calculation, an initial value of 0xFFFF is stored in a register. Then, a process is invoked to process each consecutive 8-bit byte in the message with the current value in the register. Only the 8-bit data of each character is valid for the CRC calculation; the start bit, stop bit, and parity bit (if any) are not considered.

During the CRC generation process, each 8-bit character is individually XORed (exclusive OR) with the current value in the register. The result is then shifted towards the least significant bit (LSB) direction, with the most significant bit (MSB) filled with 0. The LSB is extracted for inspection. If the LSB is 1, the register is individually XORed with a predefined value. If the LSB is 0, no XOR operation is performed. This entire process is repeated 8 times. After completing the operations

for the 8th bit, the next 8-bit byte is individually XORed with the current value in the register. The final value in the register, after all bytes in the message have been processed, is the CRC value for the entire message.

CRC check process example:

```
unsigned int crc_chk_value  (unsigned char *data_value,unsigned char length) {
unsigned int crc_value = 0xFFFF;
int i;
while   (length-- )
{
crc_value  ^= *data_value++;
for  (i=0;i<8;i++)
{
if   (crc_value&0x0001)
crc_value=(crc_value>>1)^0xH001;
else
crc_value=crc_value>>1;
}
}
return   (crc_value) ; }
```

Communication Address Definition

Function Code Parameters:

The communication address is formed by combining the group number of the current Function code for communication operations with the parameter sequence number:

High-order byte: F0~FF (Group P), A0~AF (Group H), 70~7F (Group U)

Low-order byte: 00~FF

For example, for P3-12, the address is represented as F30C. Note: For Group PF parameters, neither reading nor modifying parameters is allowed. For Group U parameters, only reading is allowed, and modification is not permitted.

Some parameters cannot be modified when the drive is in operation, while others cannot be modified regardless of the drive's operational state. When modifying Function code parameters, attention should also be paid to the parameter's range, unit, and relevant descriptions.

Additionally, since frequent storage operations to EEPROM can reduce its lifespan, for some Function codes in communication mode, it is sufficient to modify the value in RAM without needing to store it in EEPROM.

For Group F parameters, to achieve this functionality, simply change the high-order byte of the Function code address from F to 0. For Group H parameters, change the high-order byte from A to 4. The corresponding Function code addresses are represented as follows:

High-order byte: 00~0F (Group P), 40~4F (Group H)

Low-order byte: 00~FF

For example, if Function code P3-12 is not to be stored in EEPROM, the address is represented as 030C. Similarly, if Function code H0-05 is not to be stored in EEPROM, the address is represented as 4005. This address representation is only valid for writing to RAM and cannot be used for reading; attempting to read from this address will result in an invalid operation. For all parameters, this functionality can also be achieved using command code 07H.

Shutdown/Operation Parameters :

Parameter address	Parameter description
1000H	*Communication Setpoint (-10000 ~ 10000 in decimal) (Unit: 0.01%), Readable and Writable
1001H	Frequency Setpoint (0 - p0-10 in decimal), Unit (0.01Hz, adjustable via p0-22), Write-only
1002H	DC Bus Voltage (Unit: 0.1V), Read-only
1003H	Output Voltage (Unit: 0.1V), Read-only
1004H	Output Current (Unit: 0.01A for inverter power <= 55.0KW; 0.1A for power > 55.0KW), Decimal point for current can be set via Pd-06, Read-only
1005H	Output Power (Unit: 0.1kW), Read-only
1006H	Output Torque (Unit: 0.1%), Read-only
1007H	Operating Speed (Unit: 0.1Hz), Read-only
1008H	DI (Digital Input) Flag (Unit: 1), Read-only
1009H	DO (Digital Output) Flag (Unit: 1), Read-only
100AH	AI1 Voltage (Unit: 0.01V), Read-only
100BH	AI2 Voltage (Unit: 0.01V), Read-only
100CH	AI3 Voltage (Unit: 0.01V), Read-only
100DH	Counter Value Input (Unit: 1), Read-only
100EH	Length Value Input (Unit: 1), Read-only
100FH	Load Speed (Unit: 1, likely referring to a normalized or relative unit), Read-only
1010H	PID Setpoint (Unit: 0.1), Read-only
1011H	PID Feedback (Unit: 0.1), Read-only
1012H	PLC Step (Unit: 1), Read-only
1013H	PULSE Input Pulse Frequency (Unit: 0.01kHz), Read-only
1014H	Feedback Speed (Unit: 0.1Hz), Read-only
1015H	Remaining Operating Time (Unit: 0.1min), Read-only
1016H	AI1 Pre-calibration Voltage (Unit: 0.001V), Read-only
1017H	AI2 Pre-calibration Voltage (Unit: 0.001V), Read-only

Note:

The Communication Setpoint represents a relative percentage value, where 10000 corresponds to 100.00% and -10000 corresponds to -100.00%. For data with a frequency dimension, this percentage is relative to the Maximum Frequency (P0-10). For data with a torque dimension, this percentage is relative to the digital settings for the upper torque limit of the second motor (P2-10, H2-48).

Control Commands Input to the Drive: (Write-only)

Command word address	Command function
2000H	0001：forward running
	0002：reverse running
	0003：forward jog
	0004：reverse jog
	0005：free stop
	0006：Fault Reset
	0007：Fault Reset

Read drive status:(read only)

Status word address	Status word function
3000H	0001：forward running
	0002：reverse running
	0003：stop

Parameter Lock Password Verification: (If the returned value is 8888H, it indicates that the password verification has passed.)

Password address	Input password content
1F00H	*****
2001H	BIT0：DO1output control BIT1：DO2output control BIT2：RELAY1output control BIT3：RELAY2output control BIT4：FMRoutput control BIT5：VDO1 BIT6：VDO2 BIT7：VDO3 BIT8：VDO4 BIT9：VDO5

analog output AO1 control：(write only)

command address	command content
2002H	0~7FFF stands for 0％~100%

analog outputAO2 control：(write only)

command address	command content
2003H	0~7FFF stands for 0%~100%

PULSE output control：(write only)

command address	command content
2004H	0~7FFF stands for 0%~100%

Drive fault description：

Drive fault address	Drive fault information	
8000H	0000：No fault	0015：parameter write read fault
	0001：reserve	0016：Drive hardware fault
	0002：Acceleration overcurrent	0017：Motor-to-ground short circuit fault
	0003：Deceleration overcurrent	0018：reserve
	0004：Constant speed overcurrent	0019：reserve
	0005：Acceleration overvoltage	001A：Operation time reached
	0006：Deceleration overvoltage	001B：User-defined fault 1
	0007：Constant speed overvoltage	001C：User-defined fault 2
	0008：Buffer resistor overload fault	001D：Power-up time reached
	0009：Undervoltage fault	001E：Load loss
	000A：Drive overload	001F：PID feedback loss during operation
	000B：Motor overload	0028：Fast current limiting timeout fault
	000C：Input phase loss	0029：Motor switching fault during operation
	000D：Output phase loss	002A:Excessive speed deviation
	000E：Module overheating	002B：Motor overspeed
	000F：External fault	002D：Motor overtemperature
	0010：Communication abnormality	005A：Encoder line count setting error
	0011：Contactor abnormality	005B：Encoder not connected
	0012：Current detection fault	005C：Initial position error
	0013：Motor tuning fault	005E：Speed feedback error
	0014：Encoder/PG card fault	

PD group communication parameter explanation

Pd-00	Baud rate	default value	5005

	setting range	Unit digit: MODBUS Baud rate	
		0: 300BPS 1: 600BPS 2: 1200BPS 3: 2400BPS 4: 4800BPS	5: 9600BPS 6: 19200BPS 7: 38400BPS 8: 57600BPS 9: 115200BPS
		Thousands place: CANlink Baud rate CANlink communication refer CANlink communication protocol	

This parameter is used to set the data transmission rate between the host computer and the drive. Note that the baud rate set on the host computer and the drive must be consistent; otherwise, communication cannot be established. The higher the baud rate, the faster the communication speed.

Pd-01	Date format	default value	0
	setting range	0: No parity check: Data format <8, N, 2> 1: Even parity check: Data format <8, E, 1> 2: Odd parity check: Data format <8, O, 1> 3: No parity check: Data format <8-N-1>	

The data format set on the host computer and the drive must be consistent; otherwise, communication cannot be established.

Pd-02	Host address	default value	1
	setting range	1~247，0: broadcast address	

When the local address is set to 0, it serves as the broadcast address, enabling the broadcast function of the host computer.

The local address must be unique (except for the broadcast address), which is the foundation for achieving point-to-point communication between the host computer and the drive.

Pd-03	Respond delay	default value	2ms
	setting range	0~20ms	

Response delay refers to the intermediate interval time between the end of data reception by the drive and the transmission of data back to the host computer. If the response delay is shorter than the system processing time, the response delay will default to the system processing time. If t he response delay is longer than the system processing time, the system will wait for a delay until the response delay time is reached before transmitting data back to the host computer.

Pd-04	Communication overtime	default value	0.0s

	setting range	0.0s(non-valid) ； 0.1~60.0s

When this Function code is set to 0.0s, the communication timeout parameter becomes ineffective. When the Function code is set to a valid value, if the interval time between one communication and the next exceeds the communication timeout period, the system will report a communication fault error (Err16). Typically, it is set to be ineffective. However, in a continuous communication system, setting this parameter can allow for monitoring of the communication status.

Pd-05	Communication protocol selection	default value	31
	setting range	Unit digit :MODBUS 0：non-standard MODBUS protocol 1：standard MODBUS protocol 2:non-standard MODBUS protocol（write command not respond to master drive)	
		10 digit： Profibus-DP 0：PPO1 format 1：PPO2 format 2：PPO3 format 3： PPO5 format	

Pd-05=31: Selects the standard Modbus protocol.

Pd-05=30: When reading a command, the slave returns one more byte than the standard Modbus protocol. For details, refer to the "5 Communication Data Structure" section of this protocol.

Pd-06	Communication Read Current Resolution	default value	0
	setting range	0：0.01A；1：0.1A	

This parameter is used to determine the output unit of the current value when reading the output current during communication. When the frequency converter's power exceeds 55kW, the selection of the unit becomes ineffective, and the current value read through communication is displayed with one decimal place.

Appendix II: Constant Pressure Water Supply Application Macro

1 wiring diagram

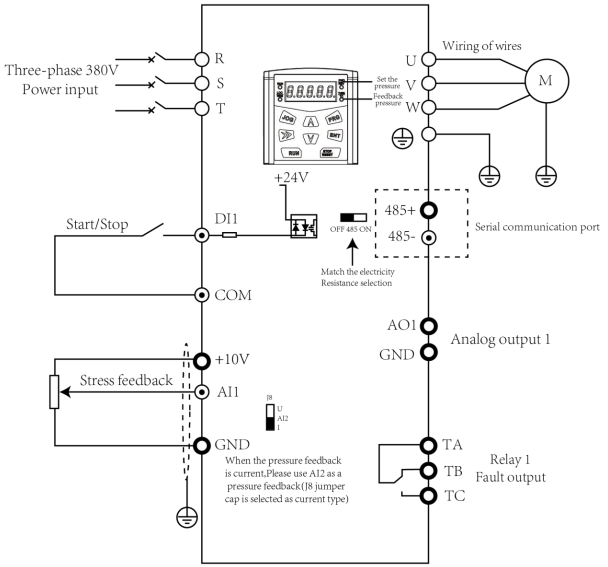

Picture 1 Pressure Feedback Voltage Wiring Diagram

Parameter Setting Instructions: Proceed with parameter settings after connecting the wires as shown in the diagram above.

2.1 Application Macro: Set L0-00=1, and the relevant parameter default values will be automatically updated. If the pressure feedback is from AI1, you can then proceed to start and stop the operation. If the pressure is from a current-type AI2, please proceed with the parameter settings in section 2.2.

Function code	Function	range	default value
P0-02	Command source	0～2	1(Terminal)
P0-03	Frequency source	0～9	8(PID)
P0-17	Acceleration Time1	0.0s～6500.0s(P0-19=1)	10.0s
P0-18	Deceleration Time1	0.0s～6500.0s	10.0s
PA-00	PID Setpoint Source	0～7	7(Up/Down)
PA-01	PID value given	0.0%～100.0%	5.0kg
PA-04	PID range	10～10000，1MPa=10kg	10.0kg
PA-05	Ratio gainKp1	0.0～100.0	50.0
PA-06	Integral time Ti1	0.01s～10.00s	1.00s

PA-14	Decimal Places for Pressure Setpoint and Feedback	1：1 digit 2：2 digits	1
PA-28	PIDCalculation During Shutdown	0: No calculation during shutdown, 1: Calculation during shutdown	1
H9-00	Sleep Mode Selection	0: Sleep mode disabled, 1: Sleep mode controlled by PID setpoint and feedback value, 2: Sleep mode controlled by operating frequency	1

2.2 Additional parameters when the feedback source is AI2:

P4-18	Minimum input for analog input curve 2	2.00V～P4-20	2.00V
PA-02	PID feedback source	0：AI1， 1：AI2， 2：AI3， 3：AI1-AI2， 4：PULSE setting（DI5） 5：communication given， 6：AI1+AI2， 7：MAX（|AI1|,|AI2|），8：MIN（|AI1|,|AI2|）	1

Note：AI2 default input 4～20mA；

2.3 common parameter, usually no need to change

Function code	Function	range	default value
P0-02	Command Source	0: Keypad (LED off) 1: Terminal (LED on) 2: Communication (LED blink)	1(Terminal)
P0-03	Main Frequency Source (X)	0: Digital Preset (set by P0-08, UP and DOWN to adjust, non-volatile) 1: Digital Preset (set by P0-08, UP and DOWN to adjust, volatile) 2: AI1 3: AI2 4: AI3 5: High-Speed Pulse (DI5) 6: (Reserved) 7: Simple PLC 8: PID 9: Communication 10: Optic Multi-Speed	8(PID)
P0-09	Rotation Direction	0: Forward 1: Reverse	0
P0-10	Maximum Frequency	50.00Hz～3200.0Hz	50.00
P0-17	Acceleration Time 1	0.00s~650.00s (P0-19=2) 0.0s~6500.0s (P0-19=1) 0s~6500s (P0-19=0)	10.0s

P0-18	Deceleration Time 1	0.00s~65000s	10.0s
PA-00	PID Setpoint Source	0: PA-01 Setting 1: AI1 2: AI2 3: AI3 4: PULSE Pulse Setting (DI5) 5: Communication Given 6: Multi-Step Command Given 7: Keypad Encoder	7
PA-01	PID Digital Setpoint	0.0%~100.0%	50.0%
PA-02	PID Feedback Source	0: AI1 1: AI2 2: AI3 3: AI1-AI2 4: PULSE Pulse Setting (DI5) 5: Communication Given 6: AI1+AI2 7: MAX(|AI1|, |AI2|) 8: MIN(|AI1|, |AI2|)	0
PA-03	PID Action Direction	0: Positive Action 1: Reverse Action	0
PA-04	PID Setpoint Feedback Range	0~65535	100
PA-05	Proportional Gain Kp1	0.0~100.0	50.0
PA-06	Integral Time Ti1	0.01s~10.00s	2.00s
PA-14	Pressure Setpoint and Feedback Decimal Places	0: No Decimal 1: 1 Decimal 2: 2 Decimals	1
PA-28	PID Stop Calculation	0: No Calculation at Stop 1: Calculate at Stop	1
H9-00	Sleep/Wake Enable	0: Disabled, 1: Controlled by PID set value and feedback, 2: Controlled by operating frequency	1
H9-01	Sleep Frequency	0.00Hz to P0-10	30.00Hz
H9-02	Sleep Delay	0.0s to 3600.0s	20.0s
H9-03	Wake-up Difference	0.0% to 100.0%	3.0%
H9-04	Wake-up Delay	0.0s to 3600.0s	0.5s
H9-05	Frequency Mode Selection During Sleep Delay	0: PID output, 1: Sleep frequency output	0

Application Cases

3.1 Single Pump Operation Mode with Pressure Feedback from a Current-Type Pressure Transmitter:

3.2 Wiring Method: As shown in Figure 2.

3.3 Parameter Settings:

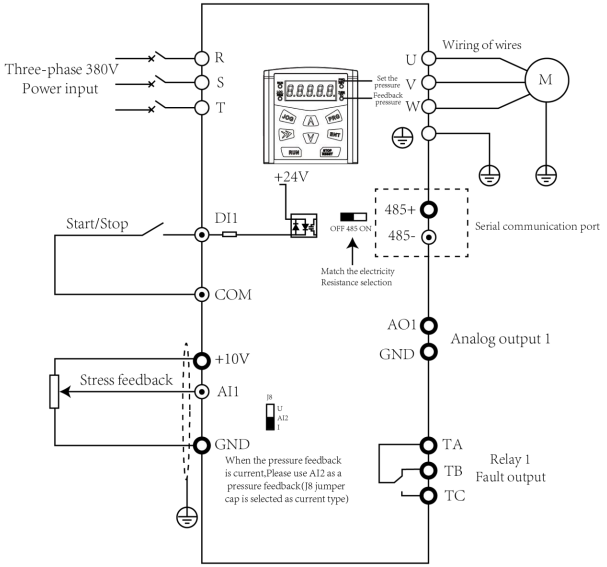

Picture 2 pressure feedback current type wiring diagram

Using a 10Kg pressure gauge as an example, with a target pressure set at 5.0Kg, the system enters sleep mode at the sleep frequency and wakes up at 4.5Kg. Here are the parameter settings:

1)Application Macro Setting: Set L0-00=1.

2)Motor Power Setting: Configure P1-01 according to the motor's actual power rating.

3)Pressure Feedback Source and Range Setting: Use the keyboard to set the pressure to 5.0Kg via the Up/Down keys, and ensure the pressure feedback source is correctly configured for the current-type pressure transmitter with the appropriate range.

Function code	Function	range	default value
P4-18	Analog Input 2 Minimum Input	2.00V～P4-20	2.00V
PA-02	PID Feedback Source	0：AI1，　　1：AI2， 2：AI3，　　3：AI1-AI2， 4：PULSE Setting（S5） 5：Communication Given 6：AI1+AI2， 7：MAX（|AI1|,|AI2|），8：MIN（|AI1|,|AI2|）	1

PA-04	PID Range	10～10000，1MPa=10kg	10.0KG

4）sleep parameter set

Function code	Function	range	default value
H9-00	Sleep/Wake Enable	0: Disabled, 1: Controlled by PID set value and feedback, 2: Controlled by operating frequency	1
H9-03	Wake-up Difference	0.0%～100.0%	5.0%

Note: Wake difference H9-03 = (5.0-4.5) / 10 * 100% = 5%