VM Manual

1 Product selection table

Model	Rated Power(kW)	Input Voltage Range	Rated Output Current(A)
VM-2SR75-E	0.75	AC 220V±15%	4
VM-2S1R5-E	1.5		7
VM-2S2R2-E	2.2		9.6
VM-4TR75-E	0.75	AC 380V-15%~440V+10%	2.5
VM-4T1R5-E	1.5		3.8
VM-4T2R2-E	2.2		5.1
VM-4T004-E	4		9
VM-4T5R5-E	5.5		13
VM-4T7R5-E	7.5		17

2 Technical specification table

Input frequency range	50/60Hz, fluctuation range±5%
Output voltage range	AC 0 ~ input voltage
Output frequency range	0～1000Hz
Control mode	V/F
Overload capacity	150% rated current 60s, 180% rated current 1s
Degree of protection	IP20
altitude	Normal use below 1000m, derating 1% for every 100m rise above 1000m, up to 3000m
Ambient temperature	-10°C~+50°C (ambient temperature is 40°C~50°C, please use derating)
humidity	Less than 95%RH, no water droplet coagulation
shake	Less than 5.9m/s2 (0.6g)
Storage temperature	-25°C～60°C

3 Structural Dimensions (mm)

Model	Shape Dimensions			Installation Dimensions		Cut-outs
	H	W	D	H1	W1	d
VM-2SR75	142	72	116	130	59	5
VM-2S1R5						
VM-2S2R2						
VM-4TR75						
VM-4T1R5						
VM-4T2R2						
VM-4T004	196	95	132	179	79	5.5
VM-4T5R5	225	115	154	208	99	5.5
VM-4T7R5						

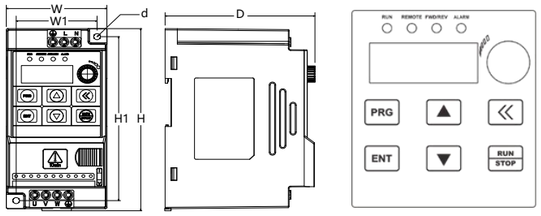

4 Keyboard operation

Category	Name	Function
Indicators	LED indicator	RUN: on/run, off/stop REMOTE: On/Terminal Control, Off/Keypad Control, Flash/Communication Control FWD/REV: On/Forward, Off/Reverse, Flash/Reverse ALARM: flashing/faulty, off/normal
Button	PRG	Menu entry or exit
	ENT	Enter the parameters step by step、save parameter adjustments
	△	Increase parameter or its value
	▽	Decrease parameter or its value
	>>	During parameter setting, select the modification bit of the parameter During stop/run monitoring, the display parameters can be selected cyclically
	RUN/STOP	In keyboard operation mode, control run and stop control It can be used for fault reset in the event of a fault mode alarm
Potentio meter	Speed Adjusting Potentiometer	Can be used for speed（frequency）adjusting

5 Terminal operation

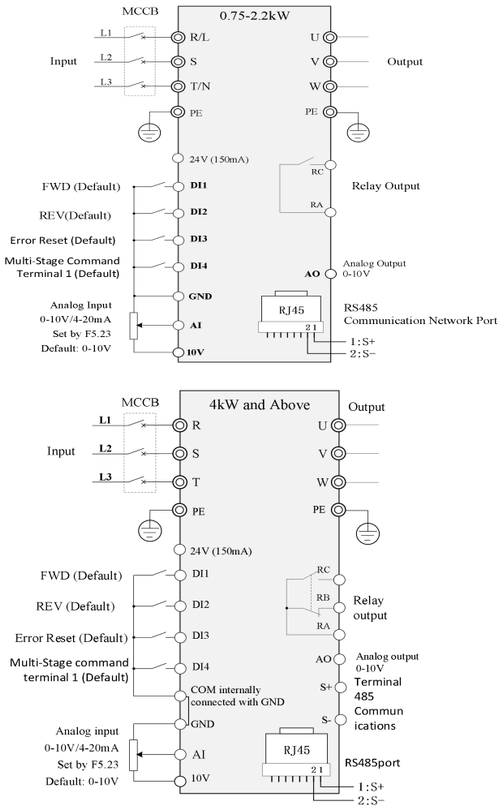

Terminal	Name	Description
R/L、S、T/N	Power input	Connected to input power
U、V、W	Output Power	Connect the motor
⏚	Grounding	Connected to ground
10V/GND	10V Power	Maximum output current: 20mA
24V/COM	24V Power	Maximum output current: 150mA
AI/GND	Analog Input	Input: DC 0V ~ 10V or 0-20mA, parameter F5.41 control
AO/GND	Analog Output	0-10V
DI1/DI2 DI3/DI4	Digital Input	External digital signal input
RA/RB/RC	Relay Output	RA/RC is normally open, RA/RB is normally closed
S+/S-	RS485 communication	S+: positive terminal of differential signal, S-: Negative terminal of differential signal
RJ45 Port		As shown in the image above; 1 foot is connected to S+ and 2 feet are connected to S-

6 Group F functional parameter table

○ -Indicates that the setting value of this parameter can be changed when the VFD is in stop or running state；

● -Indicates that the setting value of this parameter cannot be changed when the VFD is running；

◎ - Indicates that the value of this parameter is the actual detection record value and cannot be changed；

Code	Name	Range	Default	Feature	RAM Address
F0.00	Industrial Marco	0: Default Parameter Macro 6:Spring Mechanical Application Macro 8: Woodworking Machinery Macro 9: Tile Press Application Macro 10-12: GY Custom Macro	0	●	0000
F0.01	Run the command channel	0: Keyboard control 1: Terminal control 2: RS485 communication control	0	●	0001
F0.03	Main Frequency Source X Option	0: Keyboard number given frequency F0.08 1: Keyboard potentiometer given 2: AI1 is given 3: Reserved 4: Terminal UP/DW 5: Reserved 6: Multi-stage speed command 7: Program control (PLC) given terminal 8: PID control given 9: RS485 communication is given	1	●	0003
F0.04	Auxiliary frequency source Y Selection	Same as F0.03	0	●	0004
F0.05	Selection of Y range of auxiliary frequency source during superposition	0: Relative to the maximum frequency F0.10 1: Relative to frequency source X	0	○	0005
F0.06	Y range of auxiliary frequency source in superposition	0%～150%	100%	○	0006
F0.07	Combination mode of main and auxiliary channels	LED bits: Frequency source selection 0: Primary frequency source 1: The result of the main and auxiliary operations 2: Switch between main and auxiliary 3: Switch between the main frequency source and the operation result 4: Switch the auxiliary frequency source and the operation result LED 10 bits: Combination mode selection 0: Primary + Auxiliary 1: Primary - auxiliary 2: MAX {Primary, Auxiliary} 3: MIN {Primary, Auxiliary} 4: Main × auxiliary	0	○	0007
F0.08	Keyboard numbers set the frequency	0.00～F0.10	50.00Hz	○	0008
F0.09	Rotation direction selection	0: The direction remains the same 1: The direction is reversed 2: Reverse ban	0	○	0009
F0.10	Maximum frequency	0.00～320.00Hz	50.00Hz	●	000A
F0.11	Upper limit frequency source selection	0: The upper frequency number is given 1：AI1 2: Reserved 3: Reserved 4: Reserved 5: RS485 communication given 6: Reserved 7: Keyboard potentiometer given	0	●	000B
F0.12	Upper limit frequency digital setting	Lower limit frequency ~ Maximum output frequency F0.10	50.00Hz	○	000C
F0.14	Lower limit frequency	0.00～Upper limit frequency F0.12	0.00Hz	○	000E
F0.15	Lower limit frequency running mode	0: Runs at the lower limit frequency 1: Stop 2: Zero speed operation	0	○	000F
F0.16	Carrier frequency	0.5～16.0kHz	Model settings	●	0010
F0.17	Carrier PWM wave characteristic selection	Single-digit: PWM mode selection 0：PZV； 1:7 segments; LED ten-bit: The carrier is related to the output frequency 0: Independent of output frequency 1: Related to output frequency LED 100 bits: random PWM depth 0: Closed 1-8: Turn on, adjust the depth LED kilobits: Overmodulation option 0: Off 1: Turn on	1000	●	0011
F0.18	Acceleration time1	0.01～650.00s	Model settings	○	0012
F0.19	Deceleration time1	0.01～650.00s	Model settings	○	0013
F0.20	Parameter initialization	0: No action 1: Restore factory value (do not restore motor parameters) 2: Clear the failure record 3: Restore factory value (restore motor parameters)	0	●	0014
F0.21	Function code modifies properties	0: Can be modified 1: Not modifiable	0	○	0015
F0.23	Acceleration and deceleration time unit	0：1Sec 1：0.1Sec 2：0.01Sec	2	●	0017
F0.24	Acceleration and deceleration time reference frequency	0: Maximum frequency F0.10 1: Set the frequency 2：100Hz	0	●	0018
F0.25	Fan control	Single-bit: start-stop control 0: The fan runs after the inverter is powered on 1: Shutdown is related to temperature, and operation is operation 2: The shutdown fan stops, and the operation is temperature-dependent Ten digits: Enable the speed regulation function 0: Off 1: Turn on	01	○	0019
F0.26	Frequency instruction decimal point	1:1 decimal place 2:2 decimal places	2	●	001A
F0.27	Modulation ratio coefficient	5.0～150.0%	95%	●	001B
F0.28	Run command bundle	Unit: Keyboard command instruction bundle Tenth place: Terminal command instruction bundle Hundredth place: Communication command instruction bundle Thousandth place: Purchase card command instruction bundle 0: No bundling 1: Keyboard digital frequency setting 2: Keyboard potentiometer setting 3: Voltage analog quantity VS setting 4: Voltage/current analog quantity AI setting 5: Current analog quantity AS setting 6: Terminal pulse PUL setting 7: RS485 communication setting 8: Terminal UP/DW control 9: PID control setting 10: Program control PLC setting 11: Purchase card 12: VS3 (Expansion)	000	●	
F0.29	Motor control mode	0:SVC 1:VF	0	●	
F0.30	Speed/torque control mdoe	0:Speed control mode 1:torque control mode	0	●	
F1.00	Start-up operation mode	LED bits: start mode 0: Starts by the start frequency 1: DC brake first and then start from the starting frequency 2: Start after speed tracking and direction judgment LED 10 bits: rotational speed tracking direction 0: One to the direction of the shutdown 1: One to the starting direction 2: Automatic search	0	●	0100
F1.02	Speed tracking time	0.01～60.00s	0.50s	○	0102
F1.03	Startup frequency	0.00～60.00Hz	0.00Hz	○	0103
F1.04	Startup frequency duration	0.0～50.0s	0.0s	●	0104
F1.05	Brake current before starting	0.0～150.0%	0.0%	●	0105
F1.06	Braking time before starting	0.0～60.0s	0.0s	●	0106
F1.07	Acceleration and deceleration selection	0: Straight line 1: S-curve	0	●	0107
F1.08	S-curve starting acceleration rate	20.0%～100.0%	50.0%	●	0108
F1.09	S-curve starting deceleration rate	20.0%～100.0%	50.0%	●	0109
F1.10	Shutdown mode	0: Deceleration stops 1: Free shutdown	0	○	010A
F1.11	Stop DC braking start frequency	0.00～F0.10	0.00Hz	○	010B
F1.12	Downtime DC braking waiting time	0.0～100.0s	0.0s	○	010D
F1.13	Shutdown DC braking current	0.0～150.0%	0.0%	○	010C
F1.14	Downtime DC	0.0～100.0s	0.0s	○	010E

changed：

Code	Name	Range	Default	Feature	RAM Address
	braking duration				
F1.15	Brake utilization rate	0% ～ 100%	100%	○	010F
F1.16	Energy consumption, braking action voltage	115.0%～140.0%	125%	●	0110
F1.17	Zero speed holding torque time	0.0～6000.0sec When set to 6000.0s, it is maintained without time limit	0	●	0111
F1.18	Zero speed holding torque	0.0～150.0%	Model settings	●	0112
F1.19	The rotational speed tracks the current gain	0 - 100.00%	10.00%	○	0A1C
F1.20	Speed tracking gain	0 - 100.00%	5.00%	○	0A1D
F1.21	The rotational speed tracks the current	10 - 200%	60%	○	0A1E
F1.22	Shutdown frequency	0.00~60.00Hz	0	○	0112
F1.23	Startup pre-excitation time	0.00~60.00s	0	○	0113
F1.24	Power outage restart operation selection	0:Invalid 1:Valid	0	○	0114
F1.25	Power outage restart waitting time	0.00~120.00s	0.5s	○	0115
F1.26	Terminal operation protection selection	LED Unit: Command selection for terminal operation upon power-on 0: Command for terminal operation upon power-on is invalid 1: Command for terminal operation upon power-on is valid LED Ten-digit: Command selection for terminal operation when channel switching is initiated 0: Command for terminal operation upon engagement is invalid 1: Command for terminal operation upon engagement is valid	11	○	0116
F2.00	Motor type	0: Asynchronous motor (AM) 1: Permanent magnet synchronous motor (PM) 2: Single-phase asynchronous motor (only support VF control)	0	●	0200
F2.01	Motor power rating	0.1～400.0kW	Model settings	●	0201
F2.02	Motor rated voltage	0～440V	Model settings	●	0202
F2.03	Motor rated current	0.1～2000.0A	Model settings		0203
F2.04	Motor rated frequency	0.01～Maximum frequency F0.10	Model settings	●	0204
F2.05	Motor rated speed	0～65000rpm	Model settings	●	0205
F2.06	Motor stator resistance	0.001～65.000	Model settings	●	0206
F2.07	Motor rotor resistance	0.001～65.000	Model settings	●	0207
F2.08	Motor stator and rotor inductance	0.1～6500.0mH	Model settings	●	0208
F2.09	Motor stator and rotor mutual inductance	0.1～6500.0mH	Model settings	●	0209
F2.10	The motor no-load current	0.1～650.0A	Model settings	●	020A
F2.11	Teach-in selection of motor parameters	0: No action 1: Rotary self-learning 2: Static self-learning	0	●	020B
F2.12	G/P models	0: G-type machine; 1: P-type machine	0	◎	020C
F2.13	Single-phase asynchronous motor smashing ratio	10 - 200%	80%	●	020D
F2.14	Single-phase motor current calibration coefficient	50 - 200%	120%	●	020E
F2.15	Number of motor stages	2~48	4	●	
F2.18	Speed feedback or encoder type	Unit: Encoder Type 0: Ordinary ABZ Encoder 1: Rotary Transformer 2: UVW Encoder 3: Reduced-Wire UVW Encoder Tens Place: Encoder Direction 0: Direction Consistent; 1: Direction Opposite Hundreds Place: Break Detection 0: Off 1: On Thousands Place: Retention	0	●	020F
F2.19	Number of lines of the photoelectric encoder	0~60000	1024	●	0210
F2.20	PG disconnection detection time	0.000~60.000s	0.100s	○	0211
F2.21	Number of poles of the resolver	2~128	2	●	0212
F2.22	Encoder installation reduction ratio	0.000~50.000	1.000	●	0213
F2.23	Encoder filtering time	1~1000ms	10ms	●	0214
F2.24	Stator resistance of the synchronous machine	0.001~65.000	Model settings	●	0215
F2.25	D-axis inductance of the synchronous machine	0.01~655.35mH	Model settings	●	0216
F2.26	Q-axis inductance of the synchronous machine	0.01~655.35mH	Model settings	●	0217
F2.27	Synchronous machine reverse electromotive force	0.1V～1000.0V	Model settings	○	0218
F2.28	Synchronous machine encoder installation angle	0.0° ~360.0°	Model settings	●	0219
F2.29	IAE angle compensation	0~65535	0	●	021A
F2.30	High-frequency injection voltage	0.1~100.0%	20%	●	021B
F2.31	Back-EMF identification current	0.1~100.0%	80%	●	021C
F2.32	Synchronous Machine IAE Pulse	Thousands place: deviation 0:15 degrees, 1:7.5 degrees Hundreds place: IAE pulse count, minimum 1 Tens place: IAE width	120	●	021D
F2.33	Asynchronous no-load current per-unit value	0.1%	Model settings	●	021E
F2.34	Asynchronous stator resistance per unit value	0.01%	Model settings	●	021F
F2.35	Asynchronous rotor resistance per unit value	0.01%	Model settings	●	0220
F2.36	Asynchronous mutual impedance per unit value	0.1%	Model settings	●	0221
F2.37	Asynchronous leakage reactance per unit value	0.01%	Model settings	●	0222
F2.38	Asynchronous leakage reactance per-unit value	0.01%	Model settings	●	0223
F2.39	Synchronous stator resistance per-unit value	0.01%	Model settings	●	0224
F2.40	Synchronous d-axis inductance per unit value	0.01%	Model settings	●	0225
F2.41	Synchronous q-axis inductance per unit value	0.01%	Model settings	●	0226
F2.42	Synchronous motor reverse electromotive force	0.1V	Model settings	●	0227
F2.43	Encoder installation angle	0.1°	0.0°	●	0228
F3.00	ASR (Speed Loop) Proportional Gain 1	0.00 ~ 1.00	0.20	○	0300
F3.01	ASR (Speed Loop) Integral Time 1	0.01 ~ 10.00s	0.10	○	0301
F3.02	Speed Loss Protection Value	0 ~ 5000ms	0ms	○	0302
F3.03	ASR Filter Time 1	0.000 ~ 0.100s	0.005s	○	0303
F3.04	ASR Switching Frequency 1	0.00 ~ 50.00Hz	5.00Hz	○	0304
F3.05	ASR (Speed Loop) Proportional Gain 2	0.00 ~ 1.00	0.20	○	0305
F3.06	ASR (Speed Loop) Integral Time 2	0.01~10.00s	0.10	○	0306
F3.08	ASR Filter Time 2	0.000 ~ 0.100s	0.005s	○	0308
F3.09	ASR Switching Frequency 2	0.00 ~ 50.00Hz	10.00Hz	○	0309
F3.10	Slip Compensation Coefficient	0~250%	100%	○	030A
F3.11	Maximum Output Torque	0.0~250.0%	150.0%	○	030B
F3.16	Current Loop D-axis Proportional Gain	0.1 ~ 10.0	1.0	○	0310
F3.17	Current Loop D-axis Integral Gain	0.1~10.0	1.0	○	0311
F3.18	Current Loop Q-axis Proportional Gain	0.1 ~ 10.0	1.0	○	0312
F3.19	Current Loop Q-axis Integral Gain	0.1 ~ 10.0	1.0	○	0313
F3.20	D-axis Feedforward Gain	0.0 ~ 200.0%	50.0%	○	0314
F3.21	Q-axis Feedforward Gain	0.0 ~ 200.0%	50.0%	○	0315
F3.22	Optimized Current Loop Bandwidth	0.0 ~ 99.99ms	2.00ms	○	0316
F3.23	Current Loop Control Word	bit0: Unused 0: AM-ACR; 1: PMACR bit1: 0: old csr;1: new csr bit2: 0: Prediction ON; 1: Prediction OFF; bit3: 0: old week; 1: new week bit4: AM current loop PI feedforward enable	0	○	0317
F3.24	Field Weakening Control Current Limit	0~200%	80%	○	0318
F3.25	Field Weakening Control Feedforward Gain	0~500%	100%	○	0319
F3.26	Field Weakening Control Proportional Gain	0-9999	500	○	031A
F3.27	Field Weakening Control Integral Gain	0-9999	1000	○	031B
F3.28	MTPA Gain	0.0 - 500.0%	0.0%	○	031C
F3.29	MTPA Filter Time	0.0~999.9ms	100.0ms	○	031D
F3.30	Flux Compensation Coefficient	0 ~ 500%	100%	○	031E
F3.31	Open-loop Vector Observer Gain	0 - 9999	1024		031F
F3.32	Open-loop Vector Observer Filter Time	1 ~ 100ms	10ms		0320
F3.33	Open-loop Vector Compensation Start Frequency	0 ~ 100.0%	1.0%		0321
F3.34	Open-loop Vector Control Word	bit0: Unused 0: AM-ACR; 1: PMACR bit1: 0: old csr;1: new csr bit2: 0: Prediction ON; 1: Prediction OFF; bit3: EMF compensation enable bit4: EMF compensation integral	8		0322
F3.35	Synchronous Open-loop Start Mode	0: Direct start; 1: Start with angle search;	1		0323
F3.36	Synchronous Open-loop Vector Low-frequency Boost	0 ~ 100.0%	50.00%	○	0324
F3.37	Synchronous Open-loop Vector High-frequency Boost	0.0 ~ 100.0%	5.0%	○	0325
F3.38	Low-frequency Boost Hold Frequency	0.0 ~ 100.0%	10.00%	○	0326
F3.39	Low-frequency Boost Cut-off Frequency	0.0 ~ 100.0%	20.00%	○	0327
F3.40	High-frequency Injection Frequency	0 - 2000Hz	1000Hz	○	0328
F3.41	High-frequency Injection Voltage	1 - 2000 (4096 corresponds to motor rated voltage)	1000	○	0329
F3.42	PLL P	0 - 500.00	50.00	●	032A
F3.43	PLL I	0 - 500.00	40.00	○	032B
F3.44	High-frequency Injection Control Word	bit0: Enable high-frequency injection bit1: Use high-frequency injection angle at low frequency bit2: High-frequency filter depth	0/3	○	032C
F4.00	Linear VF curve selection	0: Straight VF curve; 1: Multi-point V/F curve 2: Square V/F curve 3-11: VF curves to the power of 1.1-1.9, respectively	0	●	0400
F4.01	Manual torque boost	0.1~30.0%, 0 automatic torque boost	Model settings	○	0401
F4.02	Torque boost cut-off frequency	0.00Hz ～Maximum frequency F0.10	50.00Hz	●	0402
F4.03	Self-setting frequency F1	0.00～F4.05	3.00Hz	●	0403
F4.04	Self-setting voltage V1	0.0～100.0%	10.0%	●	0404
F4.05	Self-setting frequency F2	F4.03~F4.07	5.00Hz	●	0405
F4.06	Self-setting voltage V2	0.0～100.0%	15.0%	●	0406
F4.07	Self-setting frequency F3	F4.05~F4.09	8.00Hz	●	0407
F4.08	Self-setting voltage V3	0.0～100.0%	22.0%	●	0408
F4.09	Self-setting frequency F4	F4.07~Motor rated frequency F2.04	12.00Hz	●	0408
F4.10	Self-setting voltage V4	0.0～100.0%	31.0%	●	040A
F4.11	Oscillation suppresses gain	0.0 - 10.0	5.0	○	041B
F4.12	Oscillation suppression filter time	1 - 1000ms	50ms	○	040C
F4.13	Flux Braking Gain	0 - 500%	Model settings	○	0A17
F4.14	Flux Braking Activation Voltage	110%~150%	120%	●	040E
F4.15	Flux Braking Limit	0~200%	20%	●	040F
F4.16	AVR Function	0: Disabled 1: Enabled	1	●	0410
F4.17	Reserved (User-defined Voltage V5	0.0 ~ 100.0%	100.0%	●	0409
F4.18	Reserved (User-defined Frequency F5	0.00 ~ Max. frequency	50.00Hz	●	040A
F4.19	Output Voltage Percentage	25 ~ 100%	100%	●	040B
F4.20	Slip Compensation Gain	0 - 200.0%	0%	●	040E
F4.21	Multi-power V/F Curve Start Frequency	0.00 Hz - Max. frequency	10.00Hz	○	040F
F4.24	Automatic Energy Saving Selection	Ones digit: 0: OFF, 1: ON Tens digit: Exit depth for frequency change Hundreds digit: Thousands digit:	50	○	0414
F4.25	Energy-saving Running Lower Limit Frequency	0.0 ~ 100.0%	25.0%	○	0415
F4.26	Energy-saving Voltage Reduction Time	0.1 ~ 5000.0s	10.0s	○	0416
F4.27	Energy-saving Voltage Reduction Lower Limit	20.0 ~ 100.0%	30.0%	○	0417
F4.28	Energy-saving Voltage Reduction Rate	1 - 1000V/sec	50V/sec	○	0418
F4.29	EVF torque boosts gain	0-500%	50%	○	0419
F4.30	EVF torque increases filter time	1-1000ms	20ms	○	041A
F4.31	EVF torque compensation gain	0-500.0%	0%	○	041B
F4.32	EVF torque compensates for filter time	1-1000ms	100ms	○	041C
F4.37	Stabilizer Proportional Gain	0.1% - 100.0%	5.0%		0423
F4.38	Stabilizer Filter Time	1ms - 1000ms	50ms		0424
F4.39	Low-frequency Current Boost Amplitude	0.0% - 200.0%	100.0%		0425
F4.40	Low-frequency Boost Hold Frequency	0 ~ 100.0%	20.0%		0426
F4.41	Low-frequency Current Boost Cut-off Frequency	0 ~ 100.0%	40.0%		0427
F4.42	D-axis Current Gain	0.0 - 100.0	1.0		0428
F4.43	Q-axis Current Gain	0.0 - 100.0	1.0		0429
F4.44	Flux Setting Level	0 - 500%	30%		042A
F4.45	Flux Control Proportional Gain	0 - 9999	0		042B
F4.46	Flux Control Integral Gain	0 - 9999	0		042C
F4.47	Overcurrent Suppression Point	0.0 ~ 250.0%	130.0%		042D
F4.48	Overcurrent Suppression Gain	0 - 500%	100%		042E
F4.49	Overcurrent Suppression Integral	1ms - 1000ms	30ms		042F
F4.50	DC Pull-in Time	0 - 9999	1000ms		0430
F4.51	Startup Frequency	0.00Hz ~ 99.00Hz	3.00Hz		0431
F4.52	Startup Frequency Time	0.0sec ~ 999.0sec	3.0sec		0432
F4.53	V/F Separation Output Voltage Source	0: Set by function code F0.27 1: AI1 reference 2: Reserved 3: Reserved 4: Terminal pulse PUL reference 5: PID output reference 6: RS485 communication reference	0		0433
F4.54	V/F Separation Output Voltage Digital Setting	0.0% - 100.0%	0		0434

Code	Name	Range	Default	Feature	RAM Address
F4.55	V/F Separation Voltage Rising Slope	0.0-1000.0sec	1.0		0435
F4.56	V/F Separation Voltage Falling Slope	0.0-1000.0sec	1.0		0436
F4.57	V/F Separation Stop Mode	0: Voltage and frequency decrease to 0 simultaneously; 1: Frequency decreases after voltage drops to 0;	0		0437
F5.00	Multi-function input terminal 1 (DI1)	0: Not functional 1: Forward Rotation Operation (FWD) 2: Reverse Run (REV) 3: Three-wire operation control 4: Forward Rotation Jog (FJOG) 5: Reverse Jog (RJOG) 6: Terminal UP 7: Terminal DOWN 8: Free parking 9: Fault reset (RESET) 10: The run is paused 11: External fault normally open input 12: Multi-stage speed command terminal 1 13: Multi-stage speed command terminal 2 14: Multi-stage speed command terminal 3 15: Multi-stage speed command terminal 4 16: Select terminal 1 for acceleration and deceleration time 17: Select terminal 2 for acceleration and deceleration time 18: Frequency source switching 19: UP/DOWN setting is cleared 20: Run the command to switch terminals 21: Acceleration and deceleration prohibited 22: PID paused 23: PLC status reset 30: Reserved 31: Reservation 32: Immediate DC braking 35: PID action direction is reversed terminal 36: External parking terminal 1 37: Control command toggle terminal 43: PID parameter switching terminal 44: User-defined fault 1 45: User-defined fault 2 47: Emergency stop 49: Decelerating DC braking 50: The running time is cleared	1	●	0500
F5.01	Multi-function Input Terminal 2 (DI2)		2	●	0501
F5.02	Multi-function Input Terminal 3 (DI3)		9	●	0502
F5.03	Multi-function input terminal 4 (DI4)		12	●	0503
F5.04	AI1 is used as DI terminal function selection		0	●	0504
F5.10	Virtual VDI terminal function selection		0	●	050A
F5.15	Input terminal filter time	0.000～1.000s	0.050s	○	050F
F5.16	The terminal controls the operating mode	0: Two-wire system 1 1: Two-wire system 2 2: Three-wire system 1 3: Three-wire system 2	0	●	0510
F5.17	UP/DW controls the rate of frequency increase and decrease	0.01～655.35Hz/s	0.50Hz/s	○	0511
F5.18	AI1 lower limit	0.00V ～ F5.20	0.00V	○	0512
F5.19	The lower limit of AI1 corresponds to the setting	-100.0% ～ +100.0%	0.00%	○	0513
F5.20	AI1 upper limit	F5.18～ +10.00V	10.00V	○	0514
F5.21	The AI1 upper limit is set accordingly	-100.0% ～ +100.0%	100.00%	○	0515
F5.22	AI1 filter time	0.00-10.00sec	0．10sec	○	0516
F5.23	AI input selection	0：0-10V 1：4-20mA 2: 0-20mA 3：0-5V 4：0.5-4.5V	0	○	0517
F5.33	DI1 enable delay time	0.0～360.0s	0	○	0521
F5.34	DI2 enable delay time	0.0～360.0s	0	○	0522
F5.35	DI1 energy ban delay time	0.0～360.0s	0	○	0523
F5.36	DI1 energy ban delay time	0.0～360.0s	0	○	0524
F5.37	The input terminal valid state is set to 1	0: Closure is valid 1: Disconnect is valid LED bits: DI1 terminal LED ten-digit: DI2 terminal LED 100 bits: DI3 terminal LED thousands: DI4 terminal	0000	●	0525
F5.38	Input Terminal Active State Setting 2	0: Active at low level 1: Active at high level LED ones digit: AI1 LED tens digit: Reserved LED hundreds digit: Reserved LED thousands digit: Reserved	0000	●	0526
F5.40	Analog Input Curve Selection	Ones digit: AI1 Tens digit: Reserved 0: Linear (default) 1: Curve	000	●	0528
F5.41	Curve 1 Lower Limit	0.00 ~ 10.00V	0.00V	○	052B

Code	Name	Range	Default	Feature	RAM Address
F5.42	Curve 1 Lower Limit Corresponding Setting	0.00 ~ 100.00%	0.0%	○	052C
F5.43	Curve 1 Break Point 1 Input Voltage	0.00 ~ 10.00V	3.00V	○	052D
F5.44	Curve 1 Break Point 1 Corresponding Setting	0.00 ~ 100.00%	30.0%	○	052E
F5.45	Curve 1 Break Point 2 Input Voltage	0.00 ~ 10.00V	6.00V	○	052F
F5.46	Curve 1 Break Point 2 Corresponding Setting	0.00 ~ 100.00%	60.0%	○	0530
F5.47	Curve 1 Upper Limit	0.00 ~ 10.00V	10.0V	○	0531
F5.48	Curve 1 Upper Limit Corresponding Setting	0.00 ~ 100.00%	100.0%	○	0532
F5.49	X3 Rising-edge Delay Time	0.0 ~ 360.0s	0		0533
F5.50	X3 Falling-edge Delay Time	0.0 ~ 360.0s	0		0534
F5.51	Terminal UP/DW Control Mode	0: Save on power-off and stop 1: Not saved on power-off, saved on stop 2: Valid during running, cleared on stop	0		0535
F5.52	vX Terminal Active State Source	0: Internally connected to virtual vYn 1: Determined by function code setting Ones digit: Virtual vX1 Tens digit: Reserved Hundreds digit: Reserved Thousands digit: Reserved	0000		0536
F5.53	Virtual vX Terminal Function Code Valid State	0: Invalid; 1: Valid Ones digit: Virtual vX1 Tens digit: Reserved Hundreds digit: Reserved Thousands digit: Reserved	0000		0537
F5.54	Terminal Action Mode Selection	LED ones digit: Coast-to-stop terminal recovery mode 0: Restore original command after deactivation 1: Do not restore original command after deactivation LED tens digit: Emergency stop terminal recovery mode 0: Restore original command after opening 1: Do not restore original command after opening LED hundreds digit: Terminal run mode selection after fault reset 0: Terminal control can start directly 1: Terminal control requires stop before start LED thousands digit: Reserved	0111		0538
F6.02	Relay output 1 select	0: No output 1: The inverter is running 2: Fault output (fail-stop) 4: Frequency arrives 5: Zero speed operation (no output when stopped) 11: PLC cycle complete 12: Cumulative running time arrived 15: Ready to run 17: The upper limit frequency is reached 18: Lower limit frequency reached (run-related) 19: Undervoltage status output 20: Communication settings 24: Cumulative power-on time arrived 40: This run time has arrived 41: User-defined output 1 42: User-defined output2 45: Reverse running	2	○	0602
F6.06	Virtual VDO output selection		0	●	0606
F6.11	reserved	0: Operating frequency 1: Set the frequency 2: Output current 3: Output torque 4: Output power 5: Output voltage 6：reserved 7：AI1 8：reserved	0	○	060B

Code	Name	Range	Default	Feature	RAM Address
F6.12	AO1 output selection	9：reserved 10：reserved 11：reserved 12: Communication settings 13: Motor speed 14: Output current (0-1000A, corresponding to 0-10V) 15: Output voltage (0-1000V, corresponding to 0-10V) 16: Bus voltage (0-1000V, corresponding to 0-10V)	0	○	060C
F6.13	Reserved		0	○	060D
F6.15	Bias A01 output signal	-100.0% ～ 100.0%	0.0%	○	060F
F6.16	A01 output gain	-10.00 ～ 10.00	1.00	●	0610
F6.20	Relay 1 outputs the delay time	0.0～360.0s	0	○	0614
F6.22	VD0 output delay time	0.0～360.0s	0	○	0616
F6.24	Relay 1 disconnects delay	0.0～360.0s	0	○	0618
F6.26	VD0 disconnects delay time	0.0~360.0s	0	○	061A
F6.27	Relay output active level	0: Positive logic 1: Inverse logic Digits: Reserve Ten: RL1 Hundred: Reserve Thousands: VDO	0	○	061B
F6.28	User defined output selection (EX)1	0: Operating frequency 1: Set the frequency 2: Bus voltage 3: Output voltage 4: Output current 5: Output power 6: Output torque 7-8: Reserved 9: AI1 input 10: Reservation	0	○	061C
F6.29	User-selected comparison method 1	Single-digit: Compare test methods 0: equal to (EX == X1) 1: Greater than or equal to 2: Less than or equal to 3: Interval comparison (X1 ≤ EX ≤ X2) 4: Bit test (EX & X1=X2) Ten bits: Output mode 0: False value output 1: Truth output	0	○	061D
F6.30	User-defined dead zone 1	0 ～ 65535	0	○	061E
F6.31	User-defined 1 outputs a comparison value of 1	0 ～ 65535	0	○	061F
F6.32	User-defined 1 outputs a comparison value of 2	0 ～ 65535	0	○	0620
F6.33	User-defined output selection (EX)2	Same as F6.28	0	○	0621
F6.34	User-selected comparison method 2	Same as F6.29	0	○	0622
F6.35	User-defined dead zone 2	0 ～ 65535	0	○	0623
F6.36	User-defined 2 outputs a comparison value of 1	0 ～ 65535	0	○	0624
F6.37	User-defined 2 outputs a comparison value of 2	0 ～ 65535	0	○	0625
F6.39	FM Frequency Output Lower Limit	0.00 ~ 100.00kHz	0.20kHz		060E
F6.40	FM Frequency Output Upper Limit	0.00 ~ 100.00kHz	50.00kHz		060F
F6.41	Timer Time Unit	0: Second 1: Minute 2: Hour	0	○	0626
F6.42	Timer Maximum Value	0 ~ 65000 (no reset when set to 65000)	65000	○	0627
F6.43	Timer Setting Value	0 ~ 65000	0	○	0628
F6.44	Counter Maximum Value	0 ~ 65000	1000	○	0629
F6.45	Counter Setting Value	0 ~ 65000	500	○	062A
F6.46	Output Frequency Level 1 (FDT1)	0.00 ~ Max. frequency	30	○	062B
F6.47	FDT1 Hysteresis	0.00 ~ Max. frequency	0.00Hz	○	062C
F6.48	Output Frequency Level 2 (FDT2)	0.00 ~ Max. frequency	50.00Hz	○	062D
F6.49	FDT2 Hysteresis	0.00 ~ Max. frequency	0.00Hz	○	062E
F6.50	Reference Frequency Arrival	0.00 ~ 50.00Hz	0.50Hz	○	062F

Code	Name	Range	Default	Feature	RAM Address
	Detection Band				
F6.51	Overload Pre-alarm Level	0.0 ~ 200.0%	180.0%	○	0630
F6.52	Overload Pre-alarm Delay	0.0 ~ 100.0s	0.5s	○	0631
F6.53	Underload Pre-alarm Level	0.0 ~ 200.0%	30.0%	○	0632
F6.54	Underload Pre-alarm Delay	0.0 ~ 100.0s	0.5s	○	0633
F7.02	Keyboard STOP key range	LED bits: terminal control selection 0: Invalid for terminal command 1: Valid for terminal commands LED 10 bits: communication control selection 0: Invalid for communication command 1: Valid for communication commands LED 100 bits: reserved LED thousands: reserved	0011	○	0702
F7.03	Keyboard operation displays parameter 1	LED digits: the first parameter display 0: Output frequency 1: Given frequency 2: Bus voltage 3: Output voltage 4: Output current 5: Output power 6: Output torque 7: DI input status 8: DO output status 9: AI1 voltage A: Reserved B: Reserved C: Reserved D: Reserved E: Motor speed F: PID setting LED Ten Bits: The second parameter displays LED 100 bits: the third parameter display LED thousands: The fourth parameter display	3420	○	0703
F7.04	Keyboard operation displays parameter 2	LED digits: the first parameter display 0: PID feedback 1: PLC stage 2: Reserve 3: Feedback speed 4: Reserved 5: Reserved 6: Reserved 7：Reserved 8：Reserved 9：Current power-on time A：Current elapsed time B：Reserved C：Communication settings D：Reserved E：The main frequency X display F：Auxiliary frequency Y display LED Ten Bits: The second parameter displays LED 100 bits: the third parameter display LED thousands: The fourth parameter display	0	○	0704
F7.05	Keyboard shutdown display parameters	LED digits: the first set of displays 0: Output frequency 1: Given frequency 2: Bus voltage 3: Output voltage 4: Output current 5: Output power 6: Output torque 7: DI input status 8: DO output status 9: AI1 voltage A: Reserved B: Reserved C: Motor speed D: PID setting E: PID feedback F: PLC stage LED Ten-bit: The second set of displays LED Hundred-bits: the third group display LED thousand-bits: the fourth group display	3421	○	0705
F7.06	Speed display factor	0.0001 ～ 6.5000	0.3	○	0706
F7.07	IGBT temperature	0~100	-	◎	0707
F7.08	Rectifier bridge temperature	0~100	-	◎	0708
F7.09	Cumulative run time	0~65535h	-	◎	0709
F7.10	Product number	-	-	◎	070A
F7.11	Software version	-	-	◎	070B
F7.12	reserved			○	070C
F7.13	Cumulative power-up time	0~65535h	-	◎	070D
F7.14	Cumulative power consumption		-	◎	070E
F7.16	Output power correction factor	0 - 100.0%	10.0%	○	0A1A

Code	Name	Range	Default	Feature	RAM Address
F7.17	Power display dimension selection	0 - Power Display Percentage (%) 1 - Power display kilowatt (KW)	0	○	0A1B
F7.18	Keypad Display Item Selection	LED ones digit: LCD keypad display language 0: Chinese 1: English LED tens digit: Output frequency display selection 0: Target frequency 1: Running frequency LED hundreds digit: Mechanical speed display selection 0: Target speed 1: Actual speed LED thousands digit: Fault code display mode 0: Hex code display 1: Numeric display	1000	○	0705
F7.19	Keypad UP/DOWN Key Selection	LED ones digit: Keypad UP/DOWN key modification selection 0: Disabled 1: Modify keypad digital frequency setting (F0.08) 2: Reserved 3: Modify keypad digital PID reference (Fb.01) 4: Reserved LED tens digit: Reserved LED hundreds digit: Reserved LED thousands digit: Reserved	0001	○	0705
F7.20	Keypad Potentiometer Lower Limit	0.00 ~ 5.00V	0.50V	○	070F
F7.21	Keypad Potentiometer Lower Limit Corresponding Setting	0.00 ~ 100.00%	0		
F7.22	Keypad Potentiometer Upper Limit	0.00 ~ 5.00V	4.50V		
F7.23	Keypad Potentiometer Upper Limit Corresponding Setting	0.00 ~ 100.00%	100.00		
F8.00	Jog operating frequency setting	0.00～F0.10	2.00Hz	○	0800
F8.01	Jog acceleration time	0.01～650.00s	10.00s	○	0801
F8.02	Jog deceleration time	0.01～650.00s	10.00s	○	0802
F8.03	Acceleration time2	0.01～650.00s	10.00s	○	0803
F8.04	Deceleration time 2	0.01～650.00s	10.00s	○	0804
F8.05	Acceleration time3	0.01～650.00s	10.00s	○	0805
F8.06	Deceleration time3	0.01～650.00s	10.00s	○	0806
F8.07	Acceleration time4	0.01～650.00s	10.00s	○	0807
F8.08	Deceleration time 4	0.01～650.00s	10.00s	○	0808
F8.09	Emergency stop deceleration time	0.01～650.00s	10.00s	○	0809
F8.10	Hopping frequency	0.00～F0.10	0.00Hz	○	080A
F8.11	Jump frequency amplitude	0.00～F0.10	0.00Hz	○	080B
F8.12	Reverse dead time	0.0～120.0s	0.0s	○	080C
F8.13	The arrival time of this run	0～65000min	0min	○	080D
F8.14	This run time reaches the action selection	0: Continue running 1: Fault shutdown	0	○	080E
F8.15	Terminal tapping is preferred	0: Invalid 1: Effective	1	○	080F
F8.16	PID preset switching condition selection	0: Time 1: Switch according to AI feedback value	0	○	0810
F8.17	PID AI feedback toggles the minimum	0.0～F8.18	45.0%	○	0811
F8.18	PID AI feedback toggles the maximum value	F8.17～100.0%	55.0%	○	0812
F8.19	The carrier frequency is adjusted with temperature	0: Temperature independent 1: Temperature dependent, >75, 1.0Khz	1	○	0813
F8.20	Set the cumulative power-on arrival time	0h ～ 65000h	0h	○	0814
F8.21	Set the cumulative run arrival time	0h ～ 65000h	65000h	○	0815

Code	Name	Range	Default	Feature	RAM Address
F8.22	Set the cumulative run time to reach action	0: Continue running 1: Fault shutdowm	0	●	0816
F8.23	Set the cumulative power-up time to reach the action	0: Continue running 1: Fault shutdowm	0	●	0817
F9.00	The PID controller gives the signal source	0: Keyboard number PID given 1: Keyboard potentiometer given 2：AI1 3：reserved 4：reserved 5: RS485 communication given 6: Multi-segment speed is given	0	○	0900
F9.01	Keyboard number PID given	0.00～100.0%	50.0%	○	0901
F9.02	PID controller feedback signal source	0: Keyboard numeric PID feedback 1: Keyboard potentiometer feedback 2：AI1 3：reserved 4：reserved 5：reserved 6: RS485 communication feedback	2	○	0902
F9.03	PID control selection	LED single bits: feedback feature selection 0: positive characteristic 1: negative characteristic LED 10 bits: PID adjustment direction selection 0: Reverse ban 1: Reverse allow LED 100 bits: alignment selection 0: Non-center alignment 1: Center alignment LED thousands: reserved	0100	○	0903
F9.04	The maximum range of the feedback signal	0～100.0	100.0	○	0904
F9.05	Proportional gain P	0.00～100.00	1.00	○	0905
F9.06	Integration time I	0.00～10.00s	0.10s	○	0906
F9.07	Differential gain D	0.00～10.00s	0.00s	○	0907
F9.08	Invert the cutoff frequency	0.0～F0.10	0.00Hz	○	0908
F9.09	PID control deviation limit	0.0～100.0%	0.0%	○	0909
F9.10	Differential limiting	0.00～100.00%	0.10%	○	090A
F9.11	PID set change time	0.00～100.00s	0.00s	○	090B
F9.12	PID feedback filtering time	0.00～60.00s	0.00s	○	090C
F9.13	PID output filter time	0.00～60.00s	0.00s	○	090D
F9.14	Proportional gain P2	0.00～100.00	1.00	○	090E
F9.15	Integration time I2	0.00～10.00s	0.10s	○	090F
F9.16	Differential gain D2	0.00～10.00s	0.00s	○	0910
F9.17	Parameter switching conditions	0: Do not switch 1: Terminal switching 2: Automatic switching according to deviation	0	○	0911
F9.18	Toggle deviation 1	0.0～F9.19	20.0%	○	0912
F9.19	Toggle deviation 2	F9.18～100.0%	80.0%	○	0913
F9.20	PID presets outputs	0.0～100.0%	0.0%	○	0914
F9.21	PID presets output run time	0.0～6500.0s	0.0s	○	0915
F9.22	Positive maximum of two output deviations	0.00～100.00%	1.00%	○	0916
F9.23	Double output deviation reverse maximum	0.00～100.00%	1.00%	○	0917
F9.24	Integral attributes	Single-digit: integral separation 0: Invalid 1: Effective Ten bits: Output to the limit, whether to stop integration 0: Continue points 1: Stop Credits	0	○	0918
F9.25	Lower limit value of disconnection alarm	0.0～100.0%	0.0%	○	0919
F9.26	Feedback break detection time	0.0～120.0s	0.0s	○	091A
F9.27	Feedback disconnection action selection	0: Continue PID operation without reporting faults 1: Stop and report fault (manual reset) 2: Continue PID operation and output alarm signal 3: Run at the current frequency to output alarm signal 4: Stop and report fault (automatic reset)	0	○	091B
F9.28	PID function selection	0: Normal PID 1: Hibernate PID	0	○	091C

Code	Name	Range	Default	Feature	RAM Address
F9.29	Sleep threshold	0.0%~100.0%	60.0%	○	091D
F9.30	Sleep delay	0.0~3600.0s	3.0s	○	091E
F9.31	Wake-up threshold	0.0%~100.0%	20.0%	○	091F
F9.32	Wake-up delay	0.0~3600.0s	3.0s	○	0920
F9.33	Minimum output	0:F0.14 (lower frequency) 1:0Hz	0	●	0921
F9.36	Wire break alarm upper limit	0.0~100.0%	100%	○	0924
F9.37	PID broken wire detection options	0: Downtime is not detected 1: Shutdown detection	0	○	0925
FA.00	Motor overload protection options	0: Off 1: Turn on	1	○	0A00
FA.01	Motor overload protection factor	0.0～250.0%	100.0%	○	0A01
FA.02	Motor overload warning coefficient	20.0～250.0%	80.0%	○	0A02
FA.03	Overpressure Stall/Overloss Speed Control Selection	0: Off 1: On Unit: Overvoltage suppression enable Tens: Overcurrent suppression enable Hundreds: Check if braking resistor is connected Thousands: Rapid frequency increase for overcurrent suppression	0.00Hz	○	0A03
FA.04	Udc control voltage loop gain	0.00 - 50.00	2.00	○	0A04
FA.05	Overvoltage suppression point	110% - 150%	Model Configuration	○	0A05
FA.06	Overvoltage stall filtering time	1 - 1000ms	2.00	○	0A06
FA.07	Overcurrent suppression gain	0 - 50.00	2.00	○	0A07
FA.08	Over-drain speed point	50% - 200%	150%	○	0A08
FA.09	Current-limiting integration	0.00-50.00	4.00	○	0A09
FA.10	reserved			○	0A0A
FA.11	Input phase loss protection	0: Off 1: Turn on	1	○	0A0B
FA.12	Output phase loss protection	0: Off 1: Turn on	1	○	0A0C
FA.13	Phase loss protection software detection level	0.0～999.9%	Model Configuration	○	0A0D
FA.14	PWM parameter settings	Single-digit: Turn on voltage prediction compensation Ten: 0: SSSU, 1: DSDU Hundred-bit: random carrier mode 0: Random carrier 1: Random 0 vector	0000	●	0A0E
FA.15	Hardware current and voltage protection	Single-bit: Hardware Current Limit (CBC) 0: Off 1: On Ten: Hardware overvoltage protection 0: Off 1: On Hundred-bit: SC filter time 1 - F Thousands: OC filter time 1 - F	1110	○	0A0F
FA.16	CBC Protected Point	100～220%	180%	○	0A10
FA.17	CBC overload protection time	1～5000ms	500ms	○	0A11
FA.18	Busbar undervoltage protection point	40.0% ～ 100.0%	100%	○	0A12
FA.19	Software overvoltage point	200.0V ～ 800.0V	Model settings	○	0A13
FA.20	Number of times of self-recovery	0～5	0	○	0A14
FA.21	Interval between fault self-recovery	0.1～100.0s	1.0s	○	0A15
FC.00	485 mailing address	1～247	1	○	0C00
FC.01	communication baud rate selection	0：300 bps 1：600 bps 2：1200 bps 3：2400 bps 4：4800 bps 5：9600 bps 6：19200 bps 7：38400 bps 8：57600 bps 9：115200 bps	5	○	0C01
FC.02	Modbus data format	0: (8.N.2) 8 bits, no checksum, 2 stop bits 1: (8.E.1) 8-bit, even-checked, 1-bit stop bit 2: (8.O.1) 8-bit, odd, 1-bit stop bit 3: (8.N.1) 8 bits, no checksum, 1 stop bit	3	○	0C02

Code	Name	Range	Default	Feature	RAM Address
FC.03	Modbus communication response delay	0～20ms	2ms	○	0C03
FC.04	Timeout duration of Modbus communication	0.0 (invalid), 0.1s~60.0s	0s	○	0C04
FC.06	Master/Slave Selection (Modbus and CAN)	LED ones digit: Modbus master/slave selection LED tens digit: CAN master/slave selection 0: Slave 1: Master	0	●	0C00
FC.07	Communication Ratio Setting	0.00 ~ 5.00	1.00	○	0C04
FC.08	Modbus Communication Fault Action Mode Selection	0: Alarm and coast to stop 1: Continue running without alarm 2: Stop without alarm (run command from communication) 3: Stop without alarm (run command from all channels)	1	○	0C07
FC.09	Modbus Transmission Response Handling	0: Write operation with response 1: Write operation without response	0	○	0C08
FC.10	Master Transmission Selection	LED ones digit: 1st transmit frame selection 0: Disabled 1: Run command reference 2: Master frequency reference 3: Master output frequency 4: Master upper limit frequency 5: Reserved 6: Master output torque 7: Reserved 8: Reserved 9: Master PID reference A: Master PID feedback LED tens digit: 2nd transmit frame selection Same as above LED hundreds digit: 3rd transmit frame selection Same as above LED thousands digit: 4th transmit frame selection Same as above	31	○	0C09
FC.11	RS485 Communication Port Configuration	0: Configured as Modbus communication; 1: Configured as serial communication; 2: UART_OSC	0	○	0C0A
FD.00	Multi-stage speed 0	-100%～100.0%	0	○	0D00
FD.01	Multi-stage speed 1	-100%～100.0%	0	○	0D01
FD.02	Multi-stage speed 2	-100%～100.0%	0	○	0D02
FD.03	Multi-stage speed 3	-100%～100.0%	0	○	0D03
FD.04	Multi-stage speed 4	-100%～100.0%	0	○	0D04
FD.05	Multi-stage speed 5	-100%～100.0%	0	○	0D05
FD.06	Multi-stage speed 6	-100%～100.0%	0	○	0D06
FD.07	Multi-stage speed 7	-100%～100.0%	0	○	0D07
FD.08	Multi-stage speed 8	-100%～100.0%	0	○	0D08
FD.09	Multi-stage speed 9	-100%～100.0%	0	○	0D09
FD.10	Multi-stage speed 10	-100%～100.0%	0	○	0D0A
FD.11	Multi-stage speed 11	-100%～100.0%	0	○	0D0B
FD.12	Multi-stage speed 12	-100%～100.0%	0	○	0D0C
FD.13	Multi-stage speed 13	-100%～100.0%	0	○	0D0D
FD.14	Multi-stage speed 14	-100%～100.0%	0	○	0D0E
FD.15	Multi-stage speed 15	-100%～100.0%	0	○	0D0F
FD.16	PLC operation mode	0: Stop at the end of a single run 1: The final value is maintained at the end of a single run 2: Keep looping	0	○	0D10
FD.17	PLC power-down memory selection	Bit: 0: Power down does not remember 1: Power-down memory Ten: 0: No memory of downtime 1: Shutdown memory PLC stage 2: Shutdown memory PLC stage and running time	00	○	0D11
FD.18	PLC segment 0 running time	0.0s(h) ～ 6553.5s(h)	0.0s(h)	○	0D12
FD.19	PLC segment 0 acceleration and deceleration time selection	0 ～ 3	0	○	0D13

Code	Name	Range	Default	Feature	RAM Address
FD.20	PLC segment 1 operating time	0.0s(h) ～ 6553.5s(h)	0.0s(h)	○	0D14
FD.21	PLC section 1 acceleration and deceleration time selection	0 ～ 3	0	○	0D15
FD.22	PLC segment 2 operating time	0.0s(h) ～ 6553.5s(h)	0.0s(h)	○	0D16
FD.23	PLC segment 2 acceleration and deceleration time selection	0 ～ 3	0	○	0D17
FD.24	PLC segment 3 operating time	0.0s(h) ～ 6553.5s(h)	0.0s(h)	○	0D18
FD.25	PLC section 3 acceleration and deceleration time selection	0 ～ 3	0	○	0D19
FD.26	PLC segment 4 operating time	0.0s(h) ～ 6553.5s(h)	0.0s(h)	○	0D1A
FD.27	PLC segment 4 acceleration and deceleration time selection	0 ～ 3	0	○	0D1B
FD.28	PLC segment 5 operating time	0.0s(h) ～ 6553.5s(h)	0.0s(h)	○	0D1C
FD.29	PLC section 5 acceleration and deceleration time selection	0 ～ 3	0	○	0D1D
FD.30	PLC segment 6 uptime	0.0s(h) ～ 6553.5s(h)	0.0s(h)	○	0D1E
FD.31	PLC section 6 acceleration and deceleration time selection	0 ～ 3	0	○	0D1F
FD.32	PLC segment 7 uptime	0.0s(h) ～ 6553.5s(h)	0.0s(h)	○	0D20
FD.33	PLC section 7 acceleration and deceleration time selection	0 ～ 3	0	○	0D21
FD.34	PLC segment 8 operating time	0.0s(h) ～ 6553.5s(h)	0.0s(h)	○	0D22
FD.35	PLC section 8 acceleration and deceleration time selection	0 ～ 3	0	○	0D23
FD.36	PLC segment 9 operating time	0.0s(h) ～ 6553.5s(h)	0.0s(h)	○	0D24
FD.37	PLC section 9 acceleration and deceleration time selection	0 ～ 3	0	○	0D25
FD.38	PLC segment 10 uptime	0.0s(h) ～ 6553.5s(h)	0.0s(h)	○	0D26
FD.39	PLC segment 10 acceleration and deceleration time selection	0 ～ 3	0	○	0D27
FD.40	PLC segment 11 operating time	0.0s(h) ～ 6553.5s(h)	0.0s(h)	○	0D28
FD.41	PLC section 11 acceleration and deceleration time selection	0 ～ 3	0	○	0D29
FD.42	PLC segment 12 operating time	0.0s(h) ～ 6553.5s(h)	0.0s(h)	○	0D2A
FD.43	PLC segment 12 acceleration and deceleration time selection	0 ～ 3	0	○	0D2B
FD.44	PLC segment 13 operating time	0.0s(h) ～ 6553.5s(h)	0.0s(h)	○	0D2C
FD.45	PLC segment 13 acceleration and deceleration time selection	0 ～ 3	0	○	0D2D
FD.46	PLC segment 14 operating time	0.0s(h) ～ 6553.5s(h)	0.0s(h)	○	0D2E
FD.47	PLC section 14 acceleration and deceleration time selection	0 ～ 3	0	○	0D2F
FD.48	PLC segment 15 operating time	0.0s(h) ～ 6553.5s(h)	0.0s(h)	○	0D30
FD.49	PLC section 15 acceleration and deceleration time selection	0 ～ 3	0	○	0D31
FD.50	PLC operating time unit	0：s 1：h 2：min	0	○	0D32
FD.51	Multi-segment speed instruction 0 given way	0: Function code FD.00 is given 1: AI1 is given 2: Reserve 3: Keyboard potentiometer 4: Retention 5：PID 6: The preset frequency (F0.08) is given, UP/DOWN can be modified	0	○	0D33
FD.52	Multi-speed preferred	0: Invalid 1: Effective	1	○	0D34

Code	Name	Range	Default	Feature	RAM Address
FD.55	Swing Frequency Control	LED ones digit: Swing frequency control 0: Swing frequency control disabled 1: Swing frequency control enabled LED tens digit: Swing frequency activation mode 0: Automatic 1: Manual LED hundreds digit: Swing amplitude control 0: Variable amplitude 1: Fixed amplitude LED thousands digit: Reserved	0	○	
FD.56	Swing Frequency Preset	0.00 ~ Max. frequency	0.00Hz	○	
FD.57	Preset Frequency Hold Time	0.00 ~ 650.00s	0.00s	○	
FD.58	Swing Amplitude	0.0 ~ 100.0%	0. 0%	○	
FD.59	Jump Frequency Amplitude	0.0 ~ 50.0%	0.0%	○	
FD.60	Swing Frequency Rise Time	0.00 ~ 650.00s	5.00s	○	
FD.61	Swing Frequency Fall Time	0.00 ~ 650.00s	5.00s	○	
FE.00	User password	0 ～ 65535	0	○	0E00
FE.01	Parameter and key lock selection	0: Do not lock 1: Function parameter lock 2: Function parameters and key lock (except RUN/STOP/JOG) 3: All functional parameters and buttons are locked	0	○	0E01

7 Group D monitors the parameter group

Function code	Name	Minimum unit	Change	Mailing address
D0 Group Monitors the parameter group				
D0.00	Operating frequency (Hz)	0.01Hz	●	D000
D0.01	Set frequency (Hz)	0.01Hz	●	D001
D0.02	Bus Voltage(V)	0.1V	●	D002
D0.03	Output Voltage(V)	1V	●	D003
D0.04	Output Current(A)	0.01A	●	D004
D0.05	Output power(kW)	0.1kW	●	D005
D0.06	Output torque (%)	0.1%	●	D006
D0.07	DI input status	1	●	D007
D0.08	DO output status	1	●	D008
D0.09	AI1 voltage (V)	0.01V	●	D009
D0.10	Reserved	-	●	D00A
D0.11	Reserved	-	●	D00B
D0.12	Module temperature	℃	●	D00C
D0.13	Count value	1	●	D00D
D0.14	Load speed display	1	●	D00E
D0.15	PID setting	1	●	D00F
D0.16	PID feedback	1	●	D010
D0.17	PLC stage	1	●	D011
D0.18	Reserved	1	●	D012
D0.19	Feedback speed (unit: 0.1Hz)	0.1Hz	●	D013
D0.20	Reserved	-	●	D014
D0.21	Reserved	-	●	D015
D0.22	Reserved	-	●	D016
D0.23	Reserved	-	●	D017
D0.24	Reserved	-	●	D018
D0.25	Current power-on time	1Min	●	D019
D0.26	Current running time	0.1Min	●	D01A
D0.27	Reserved	-	●	D01B
D0.28	Communication Settings	0.01%	●	D01C
D0.29	Reserved	-	●	D01D
D0.30	Master frequency X display	0.01Hz	●	D01E
D0.31	Secondary frequency Y display	0.01Hz	●	D01F

8 Group E Failure Logging Group

Parameter	Name	Set the scope and description	Attribute	Mailing address
E0.00	The type of most recent failure	Trouble-free: 0 Accelerated overcurrent: Err02 Deceleration overcurrent: Err03 Constant speed overcurrent: Err04 Accelerated overvoltage: Err05 Deceleration overvoltage: Err06 Constant speed overvoltage: Err07 Undervoltage fault: Err09 Inverter overload: Err10 Motor overload: Err11 Output phase loss: Err13 Module overheating: Err14 External fault: Err15 Current detection fault: Err18 Parameter read and write exception: Err21 EEPROM read and write failure: Err22 Cumulative run time reached: Err26PID 反馈断线故障：Err31	●	E000
E0.01	Frequency at the time of the most recent failure	0.0Hz-Maximum frequency	●	E001
E0.02	Current at the time of the most recent fault	0.00-655.35	●	E002
E0.03	Bus voltage at the time of the most recent fault	0-810V	●	E003
E0.04	Enter the terminal status at the time of the most recent fault	0-15	●	E004
E0.05	Inverter temperature at the time of the most recent failure	0-65535	●	E005
E0.06	Faulty module temperature	0-100℃	●	E006
E0.07	Fault inverter status	LED bits: Running direction 0: Forward 1: Reverse LED ten-bit: operating status 0: Downtime 1: Steady speed 2: Acceleration 3: Deceleration LED 100 bits: reserved LED thousands: reserved	●	E007
E0.08	Fault run time (from this power-up)	0~65535H	●	E008
E0.09	Fault run time (from total run time)	0~65535H	●	E009
E0.10	Fault output voltage	0~1500V	●	E00A
E0.11	Reserved		●	E00B
Groups E1-E4 are recorded with groups E0				

9 Main fault codes and handling

Fault code	Failure type	The cause of the failure	countermeasure
Err02 Err03 Err04	Accelerates overcurrent Decelerate overcurrent Constant speed overcurrent	The acceleration/deceleration time setting is too short	Extended acceleration/deceleration time
		The selection of frequency converters is too small	Select a frequency converter that matches the motor power and load situation
		There is a ground or short circuit in the output loop of the inverter	Troubleshoot peripheral faults and check whether a short circuit has occurred on the motor end
Err05 Err06 Err07	Accelerated overvoltage Decelerate overvoltage Constant speed overvoltage	The input voltage is on the high side	Adjust the input voltage to the normal range
		The deceleration time is too short	Increase the deceleration time
		The load inertia is too large	Increase the acceleration time
Err09	Undervoltage fault	The power supply input voltage is too low	Adjust the input voltage to the normal range
Err10	The frequency converter is overloaded	The load is too large or the motor is stalled	Reduce load and check motor and mechanical condition

Fault code	Failure type	The cause of the failure	countermeasure
		The selection of frequency converters is too small	Choose a frequency converter with a large power gear
Err11	The motor is overloaded	The motor overload protection parameters are not set appropriately	Reset the parameters
		The load is too large or the motor is stalled	Reduce load and check motor and mechanical condition
Err13	The output is out of phase	Motor failure	Check whether the motor windings are open
		There is an abnormality in the lead from the frequency converter to the motor	Troubleshoot the perimeter
		The three-phase output of the inverter is unbalanced when the motor is running	Check whether the three-phase winding of the motor is normal and troubleshoot
		The IGBT module is abnormal	Seek technical support
Err14	The module is overheating	The ambient temperature is too high	Improve ambient temperature
		The air duct is blocked	Clean the air duct
		The fan is abnormal	Replace the fan
		The thermistor, inverter module is damaged	Seek technical support
Err15	Peripheral failure	DI signal triggering for external fault	Troubleshoot external signals
Err16	Communication failure	The host computer works abnormally	Check the wiring of the host computer
		RS485 communication line is abnormal	Check the communication cable
		The communication parameter FC group is set incorrectly	Set the communication parameters correctly
Err18	Current detection fault	The circuit self-test failed	Seek technical support
Err21	Data overflow	The control board is abnormal	Seek technical support
Err22	EEPROM read and write failures	The EEPROM chip is damaged	Seek technical support

10 RS485 communication register

Function description	Address	Parameter description	Data description	Attribute
Communication settings	1000H	-10000～10000(number of signs)	Corresponds to maximum frequency± 100.00%	Readable and writable
Control commands	2000H	0001：Forward run	-	Write only
		0002：Reverse the run	-	Write only
		0003：Forward jogging	-	Write only
		0004：Reverse jogging	-	Write only
		0005：Free downtime	-	Write only
		0006：Deceleration stops	-	Write only
		0007：Fault reset	-	Write only
Running status	3000H	0001：Forward running	-	read only
		0002：Reverse running	-	read only
		0003：stoppage	-	read only
Status data monitoring	1001H	Operating frequency (Hz)	2 decimal places	read only
	1002H	Set frequency (Hz)	2 decimal places	read only
	1003H	Bus Voltage(V)	1 decimal place	read only

Function description	Address	Parameter description	Data description	Attribute
	1004H	Output Voltage(V)	1 decimal place	read only
	1005H	Output Current(A)	2 decimal places	read only
	100DH	Inverter temperature	1 decimal place	read only
	1008H	Digital input status	DI1-DI4 are added by binary bit weights	read only
	100CH	Keyboard potentiometer voltage (V)	1 decimal place	read only
	100AH	AI Voltage(V)	1 decimal place	read only
	1000FH	Load speed display	1 decimal place	read only
	1012H	PLC stage	The number of segments in which the PLC is running	read only
Fault status monitoring	8000H	0000：Trouble-free	-	read only
		0002：Accelerates overcurrent	-	read only
		0003：Decelerate overcurrent	-	read only
		0004：Constant speed overcurrent	-	read only
		0005：Accelerated overvoltage	-	read only
		0006：Decelerate overvoltage	-	read only
		0007：Constant speed overvoltage	-	read only
		0009：Undervoltage fault	-	read only
		000A：The frequency converter is overloaded	-	read only
		000B：The motor is overloaded	-	read only
		000D：The output is out of phase	-	read only
		000E：The module is overheating	-	read only
		000F：External failure	-	read only
		0012：Current detection fault	-	read only
		0015：Parameter read and write exceptions	-	read only
Communication fault feedback	8001H	0000：Trouble-free	-	read only
		0001：Command code error	-	read only
		0002：Communication transmission error	-	read only
		0003：CRC check error	-	read only
		0004：Invalid address	-	read only
		0005：Invalid data	-	read only
		0006：Invalid parameter changes	-	read only
		0007：The system is locked	-	read only
		0008：Parameters are being stored	-	read only

11 Description of correspondence address

The communication address listed in the function code table is the write RAM mode, the data is not saved after the inverter is powered off, in the communication, for the write command "06H", if the parameter needs to be powered down and stored, the way of writing EEPROM should be used, the original RAM address highest bit "0" changed to "F", converted into the corresponding EEPROM address, such as: "0XXX" changed to "FXXX", address conversion example:

The upper frequency is F012, the communication address of the write RAM is: 000C, and the address corresponding to EEPROM is: F00C.

Acceleration time F018, the address of the write RAM is 0012, and the address corresponding to EEPROM is: F012.

It should be noted that the erasing and writing life of EEPROM is about 1 million times, after exceeding the number of erasing and writing, it will affect the reliability of data storage, if it is not necessary, it is recommended to use write RAM to control communication.

12 Attention to the product installation interval

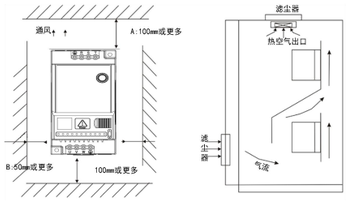

Note: The minimum size of the installation distance of A is 100mm, and the minimum size of the installation distance of B is 50mm; The power is increased, and the interval size is reasonably increased.

Website: https://docs.we-con.com.cn/bin/view/Home/

Email: support@we-con.com.cn